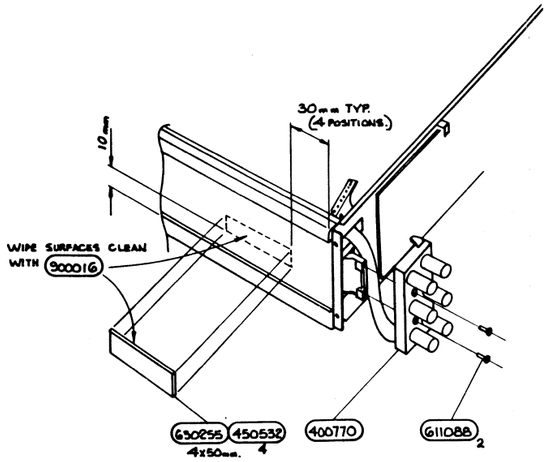

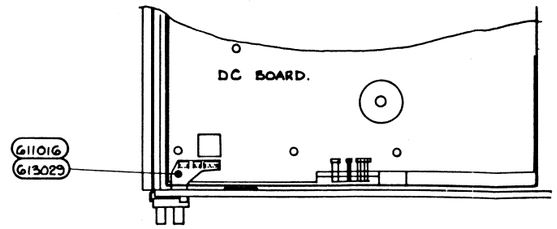

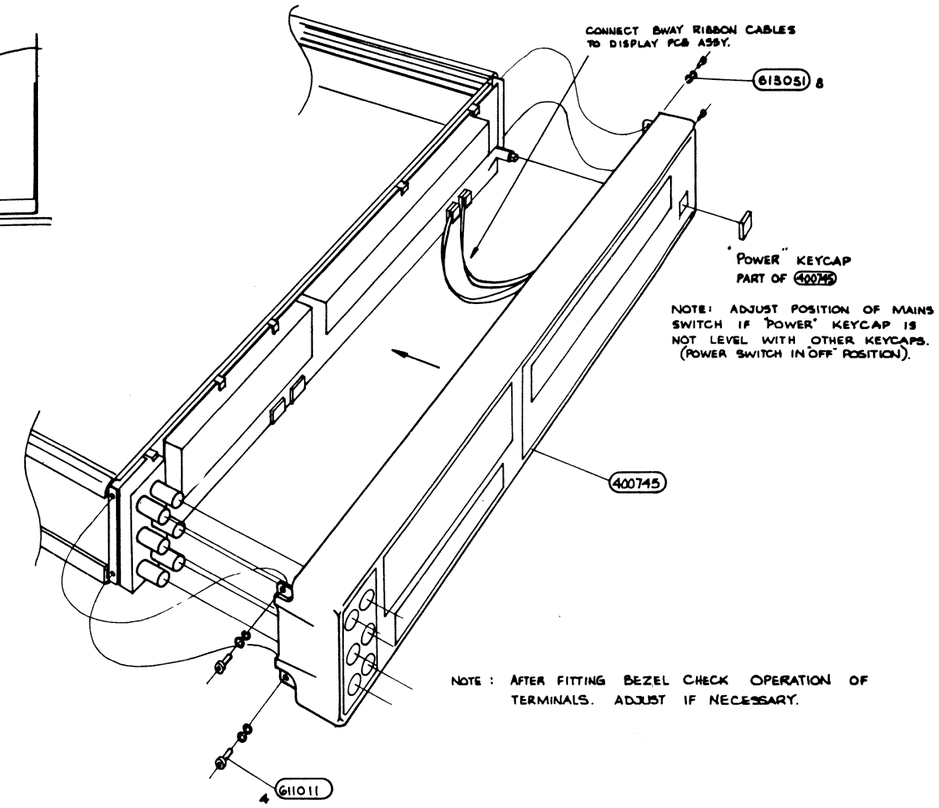

NOTE : AFTER FITTING BEZEL CHECK OPERATION OF TERMINALS. ADJUST IF NECESSARY.

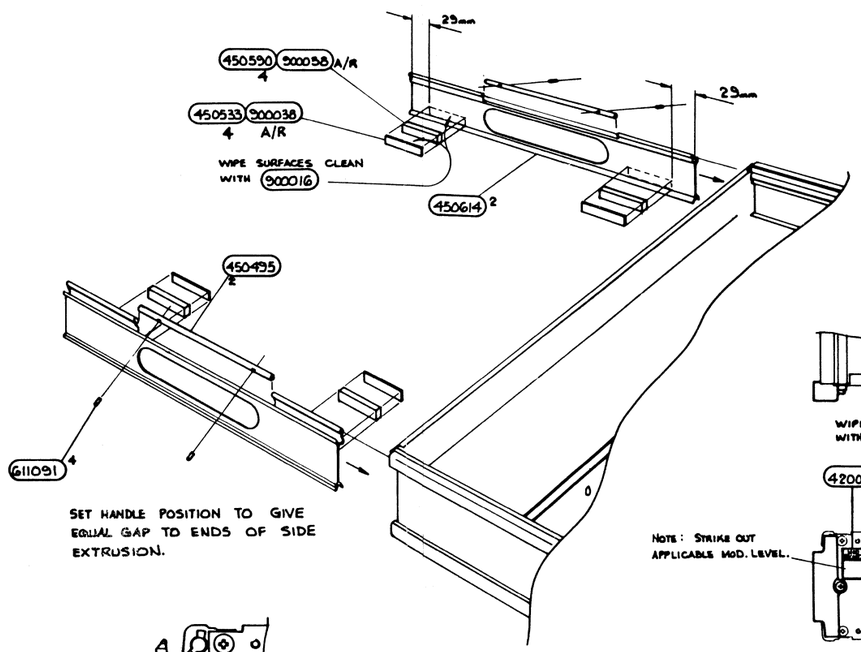

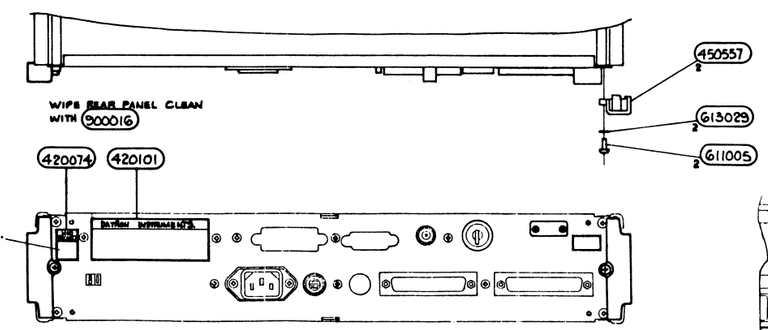

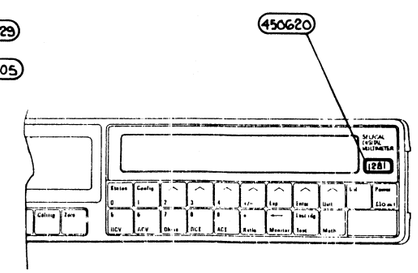

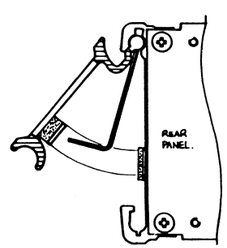

1281

datron WAVETEK

© Datron Instruments 1989

FINISHED ASSEMBLY

Drawing No. 480734 **Sheet 1**

AC OPTION FITTING: REMOVE GU. SCREEN.
FIT BOARD TO CHASSIS WITH 613029 + 611016.
FIT 4 OFF 612046 THEN REFIT GU SCREEN
WITH 611007 - 8 OFF.

FIT REQUIRED OPTION BOARDS IN POSITIONS SHOWN, SECURE TO CENTRE SHIELD USING NYLATCH PRESS FASTENERS. (Ω & I)
(AC BOARD FIXED BY SCREWS).

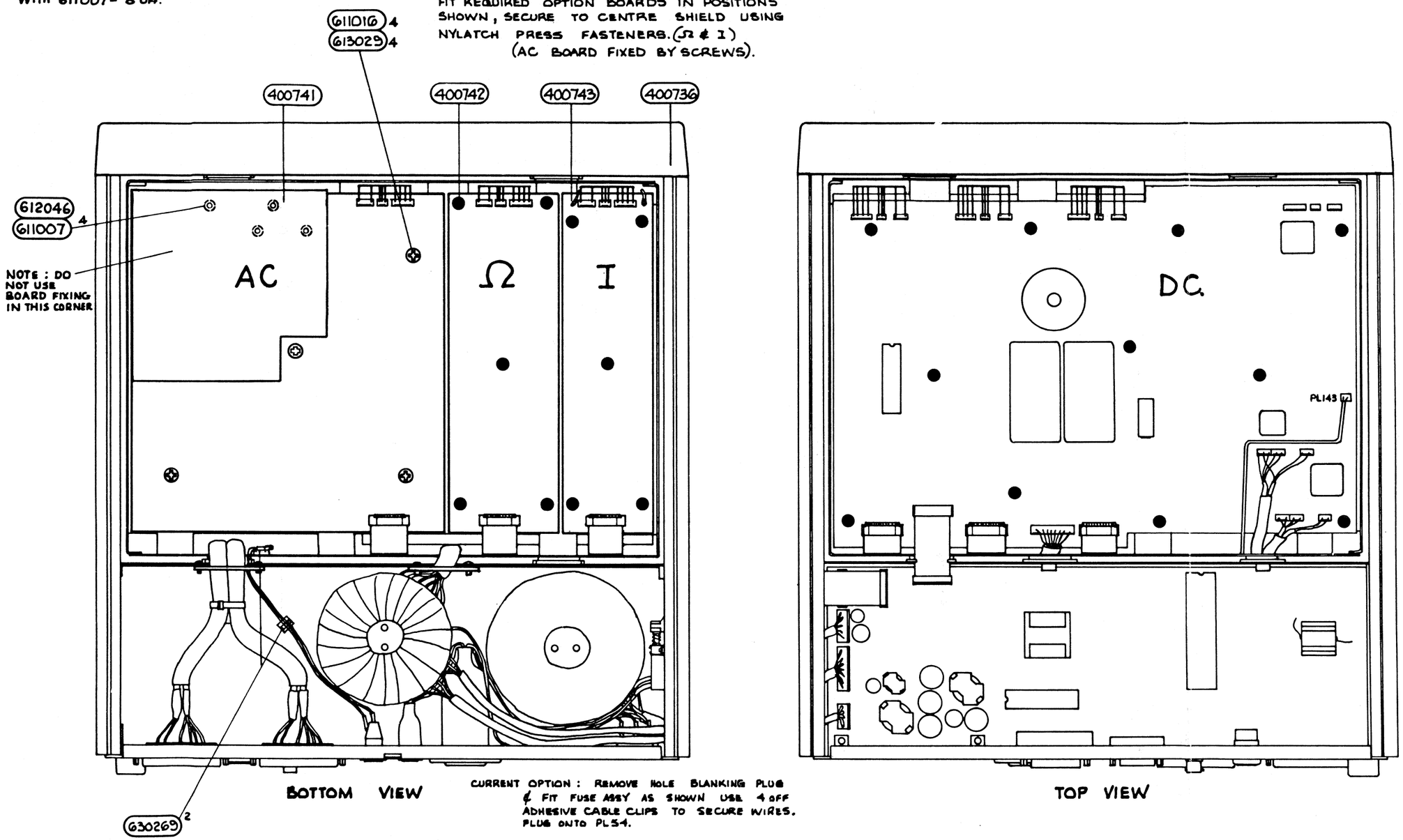

BOTTOM VIEW

CURRENT OPTION: REMOVE HOLE BLANKING PLUG & FIT FUSE ASSY AS SHOWN USE 4 OFF ADHESIVE CABLE CLIPS TO SECURE WIRES. PLUG ONTO PL54.

TOP VIEW

1281

datron WAVETEK

FINISHED ASSEMBLY

Drawing No. 480734 Sheet 2

© Datron Instruments 1989

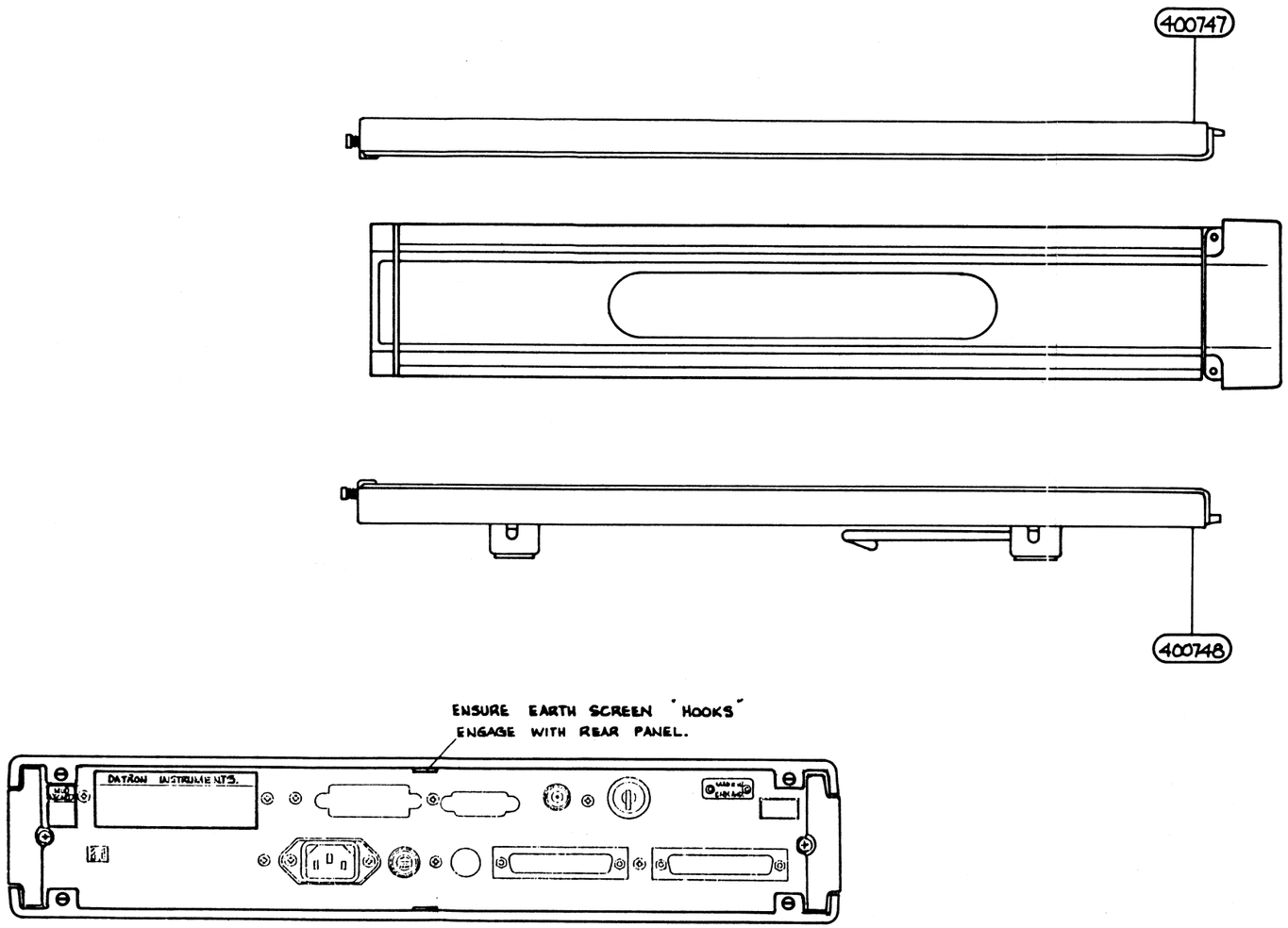

1281

datron WAVETEK

© Datron Instruments 1989

FINISHED ASSEMBLY

Drawing No. 480734 **Sheet 3**

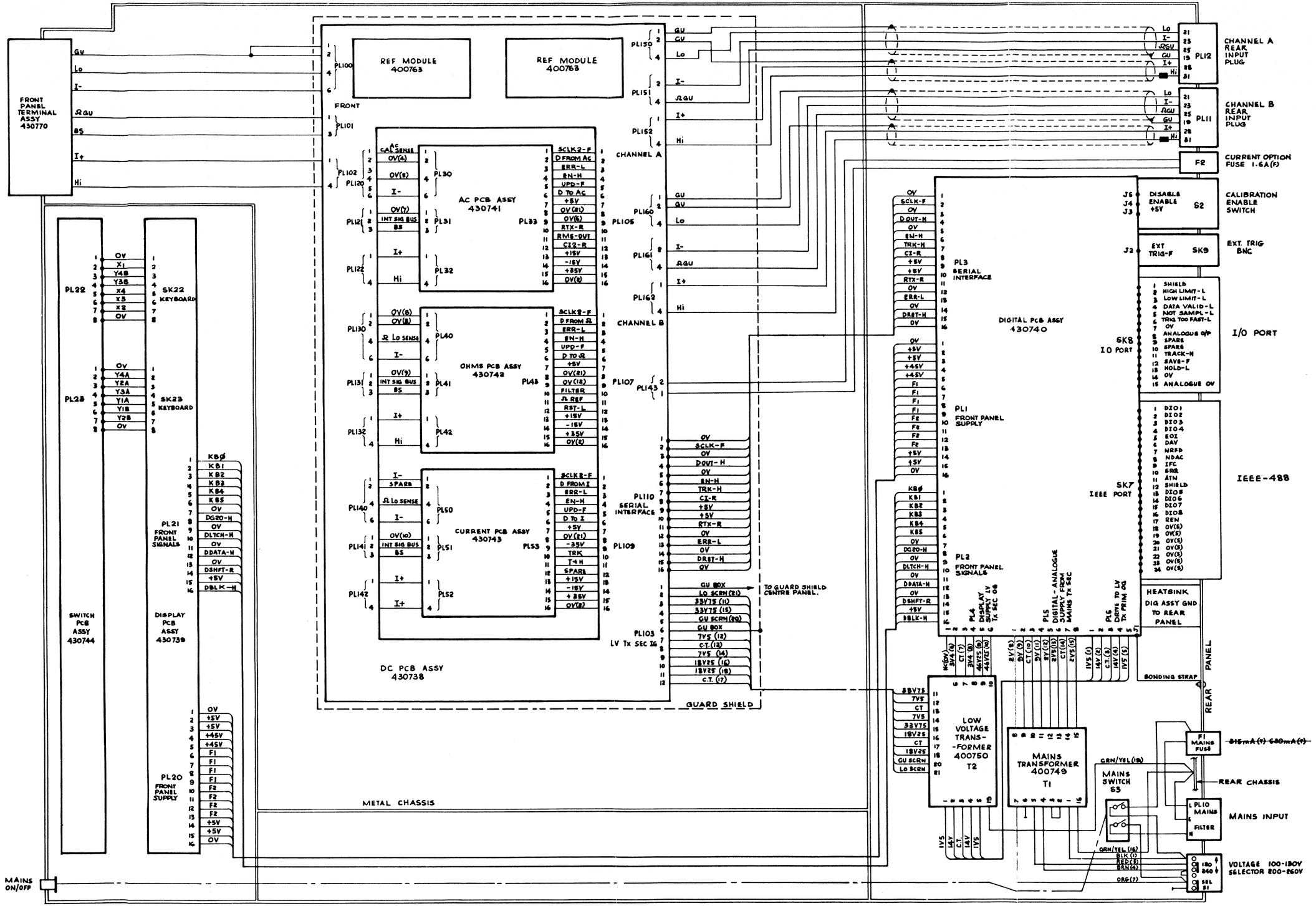

1281

datron WAVETEK

INTERCONNECTION DIAGRAM

Drawing No. 430734 Sheet 1

© Datron Instruments 1989

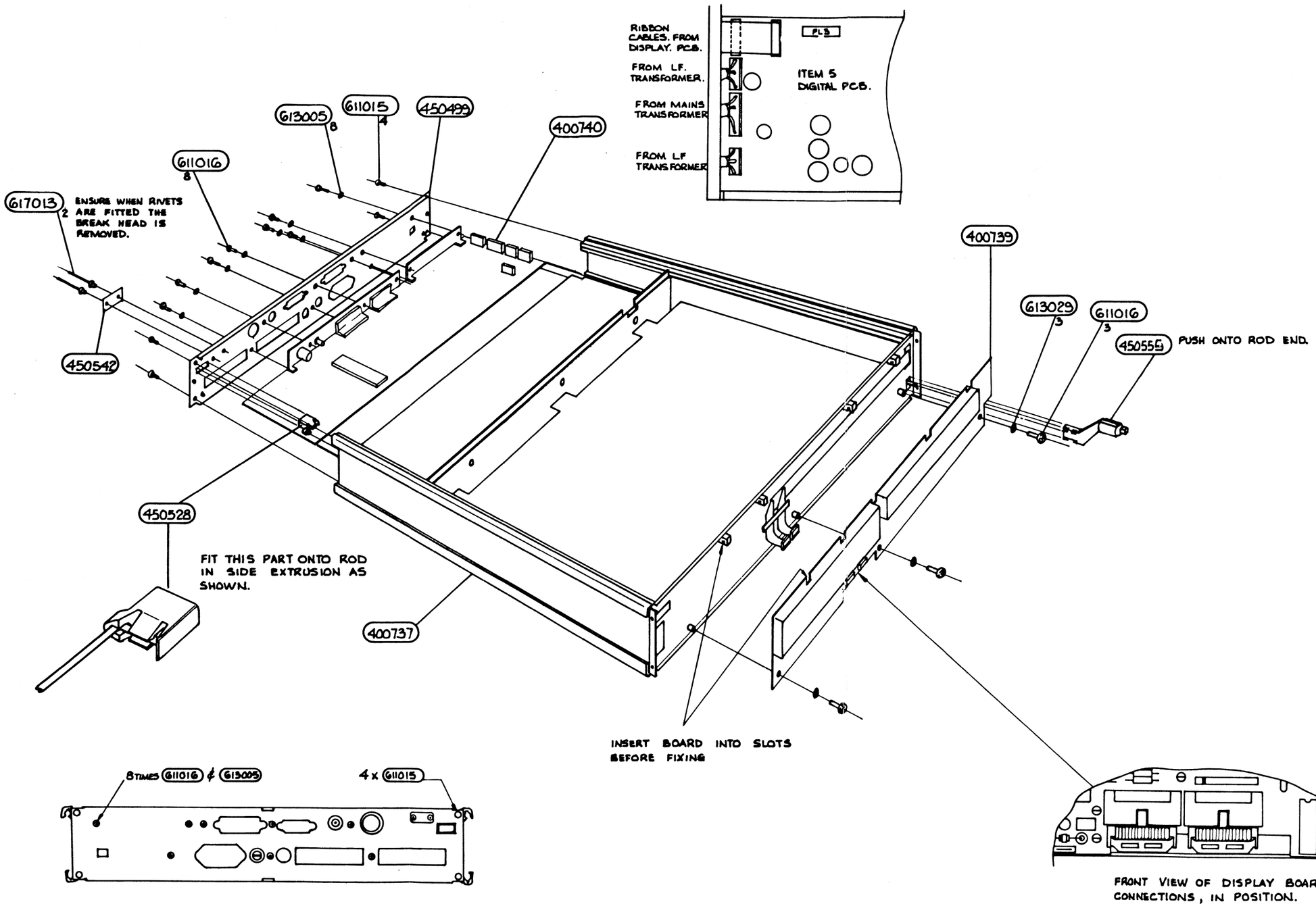

1281

datron WAVETEK

© Datron Instruments 1989

INSTRUMENT ASSEMBLY

Drawing No. 480736 Sheet 1

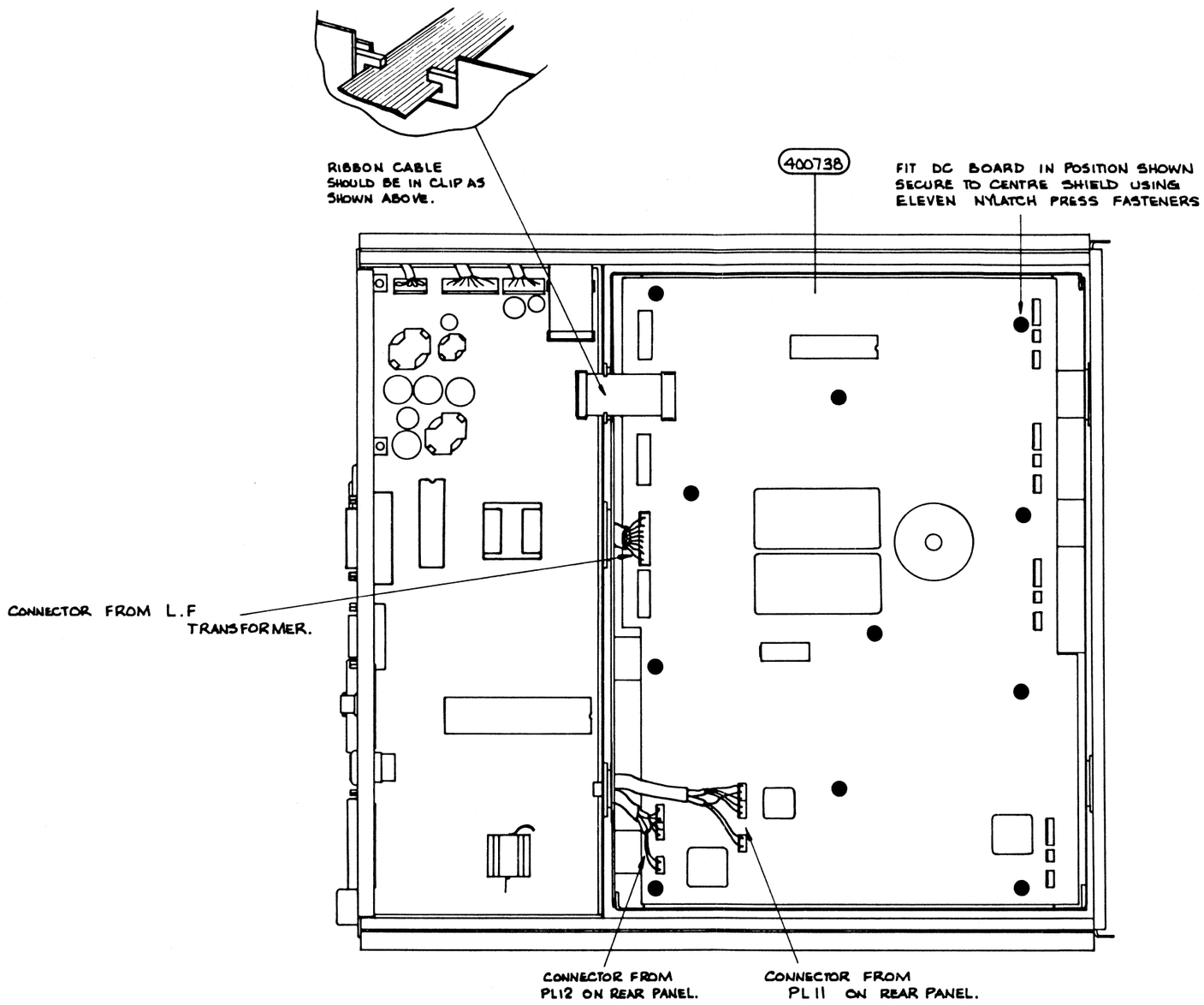

1281

datron WAVETEK

INSTRUMENT ASSEMBLY

Drawing No. 480736 Sheet 2

© Datron Instruments 1989

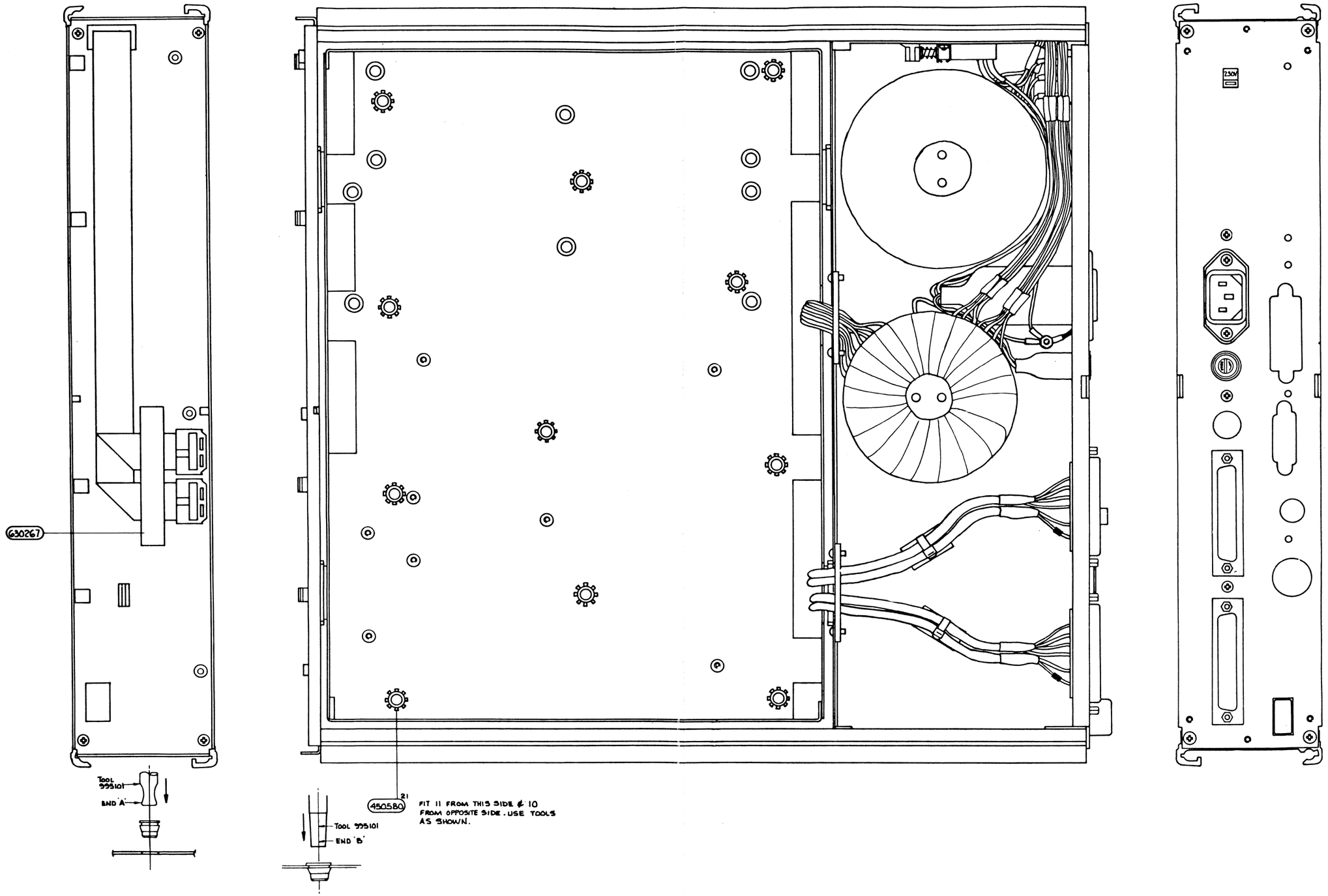

1281

datron WAVETEK

© Datron Instruments 1989

CHASSIS ASSEMBLY

Drawing No. 480737 **Sheet 1**

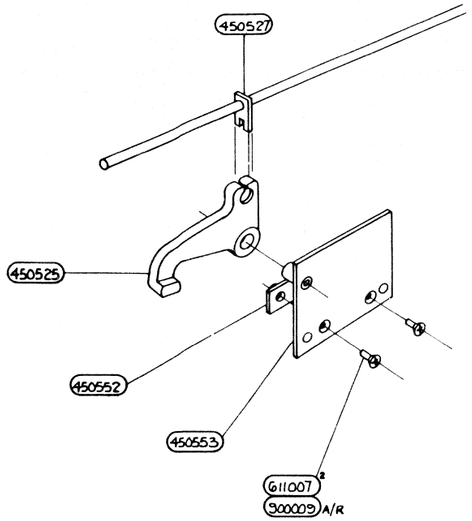

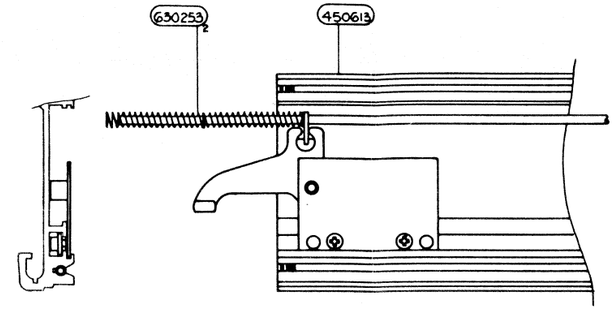

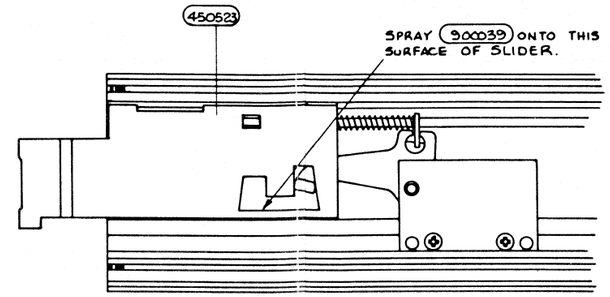

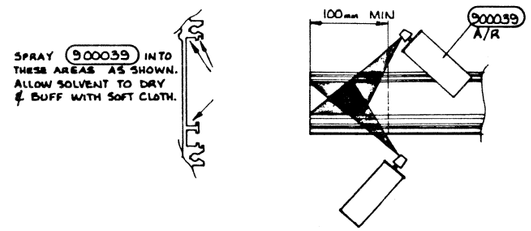

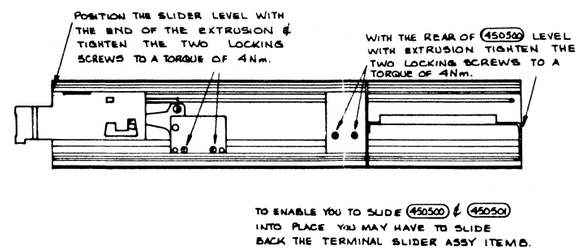

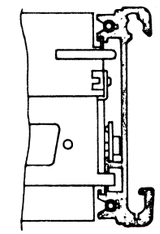

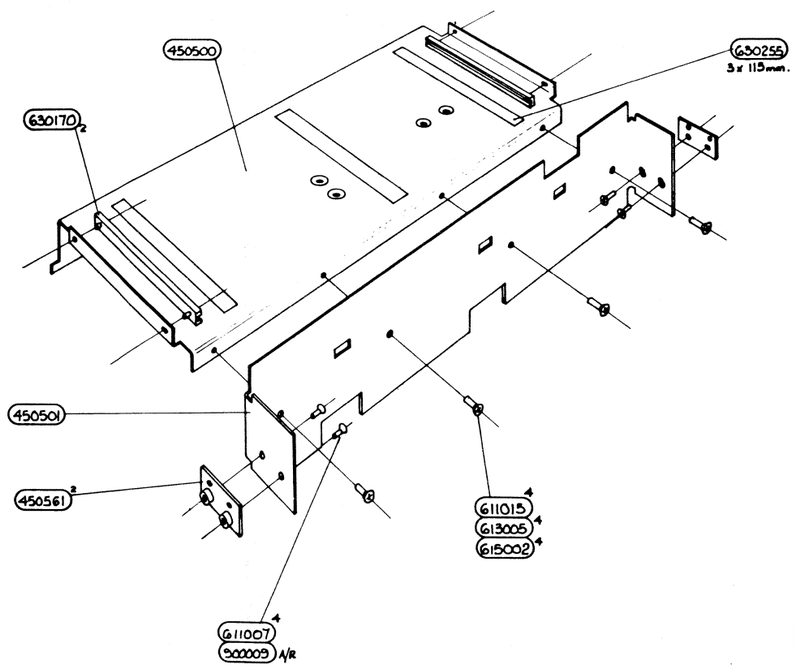

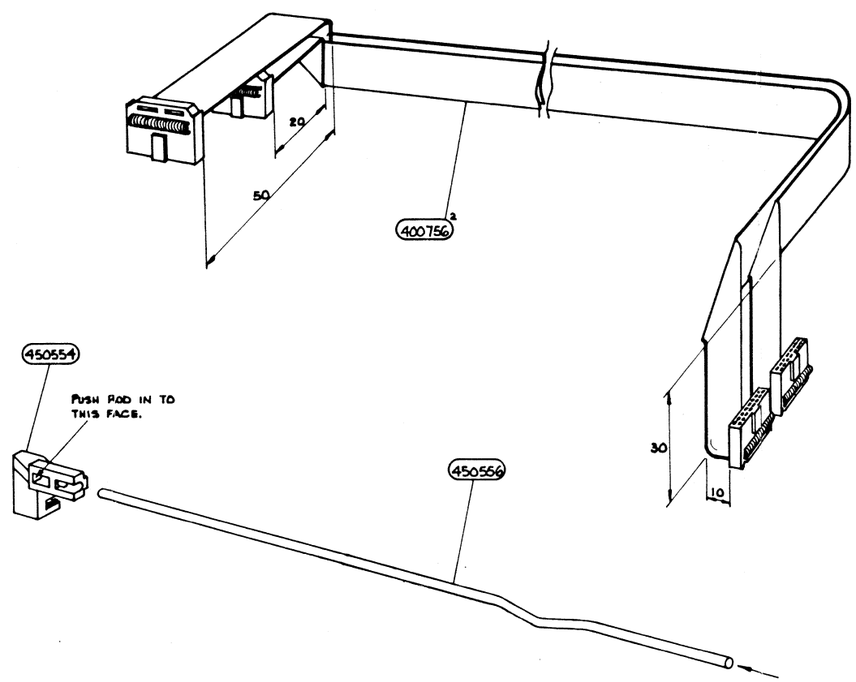

1281

datron WAVETEK

CHASSIS ASSEMBLY

Drawing No. 480737 **Sheet 2**

© Datron Instruments 1989

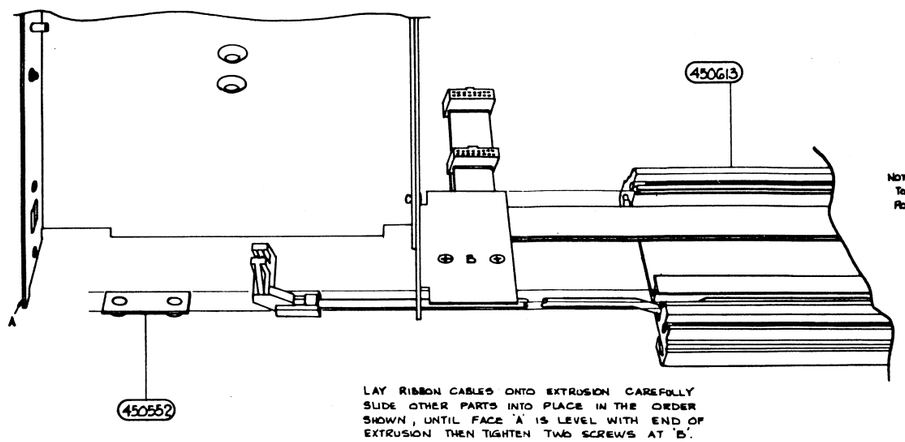

LAY RIBBON CABLES ONTO EXTRUSION CAREFULLY SLIDE OTHER PARTS INTO PLACE IN THE ORDER SHOWN, UNTIL FACE 'A' IS LEVEL WITH END OF EXTRUSION THEN TIGHTEN TWO SCREWS AT 'B'.

NOTE BUMP ON MAINS SWITCH ROD TO BE TOWARDS FRONT & POINTING DOWNWARDS.

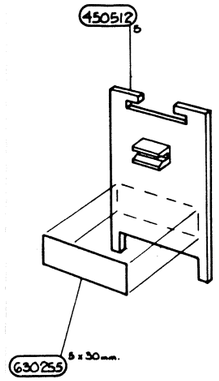

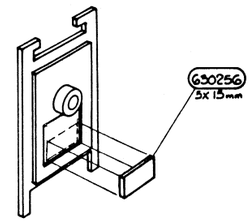

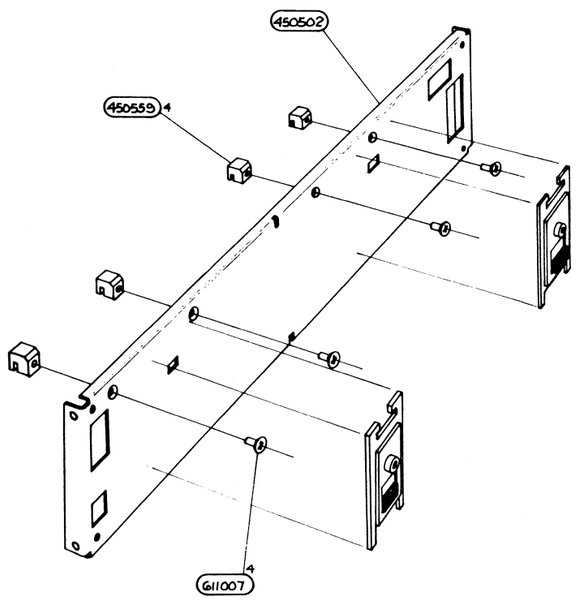

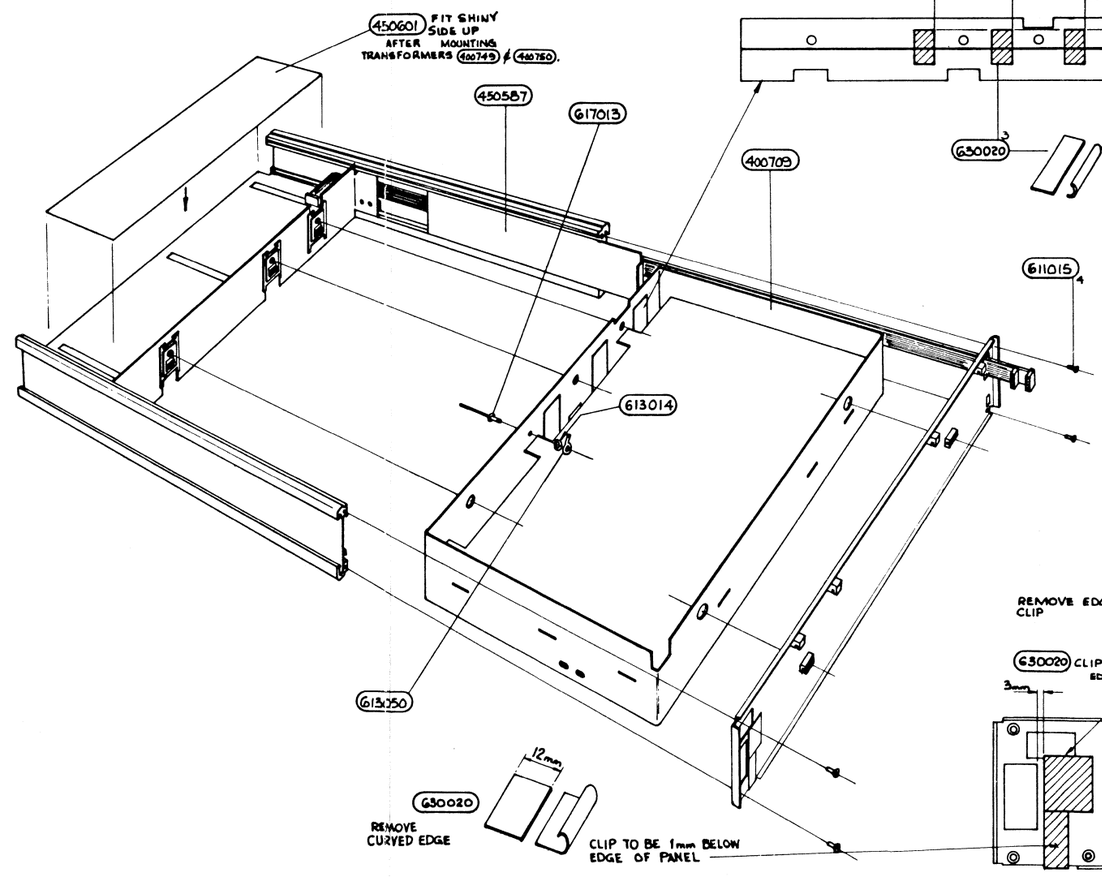

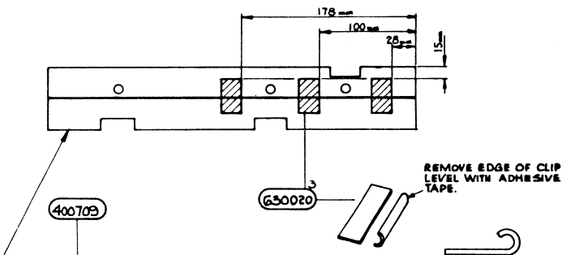

1281

datron WAVETEK

© Datron Instruments 1989

CHASSIS ASSEMBLY

Drawing No. 480737 **Sheet 3**

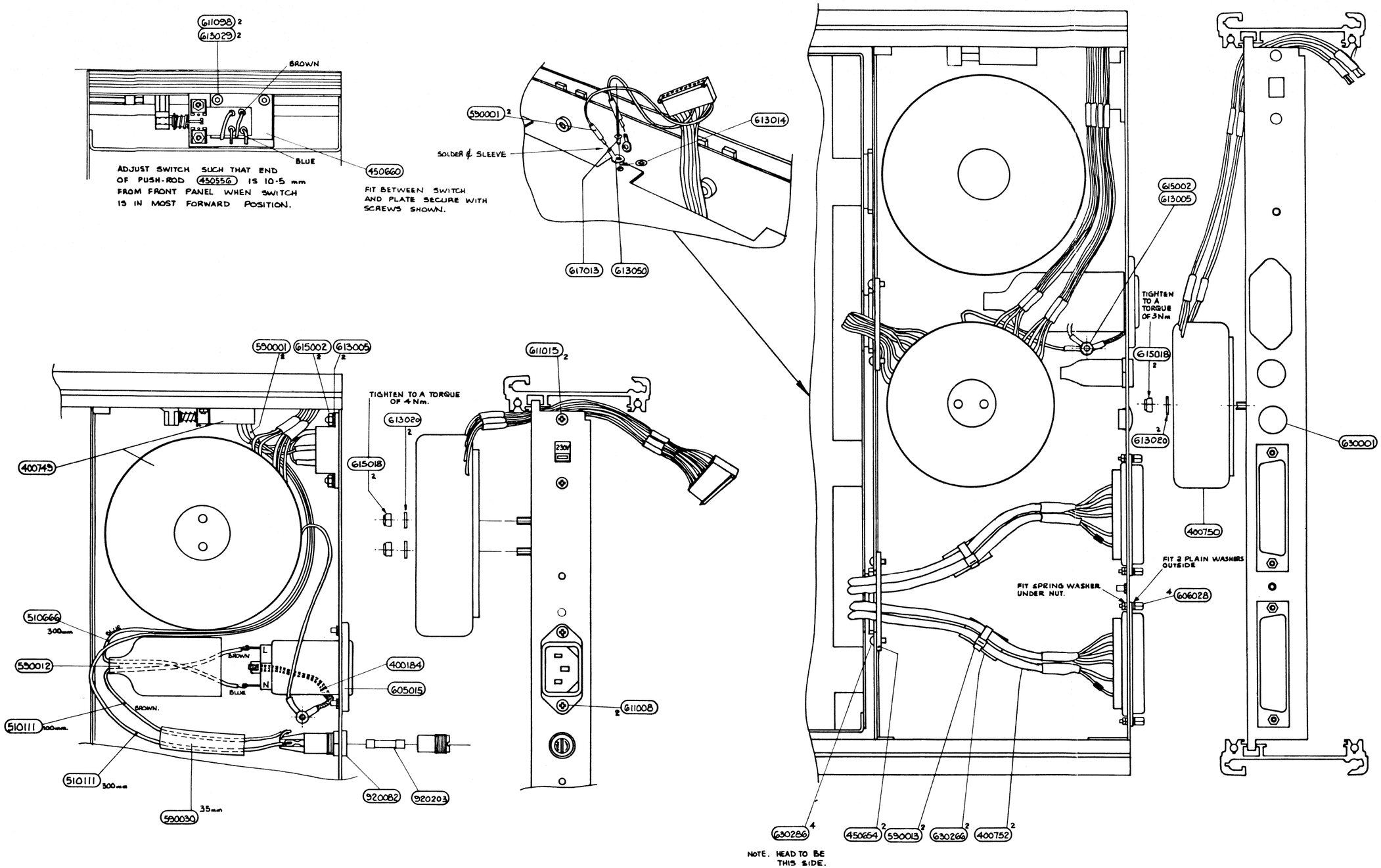

1281

datron WAVETEK

CHASSIS ASSEMBLY

Drawing No. 480737 **Sheet 4**

© Datron Instruments 1989

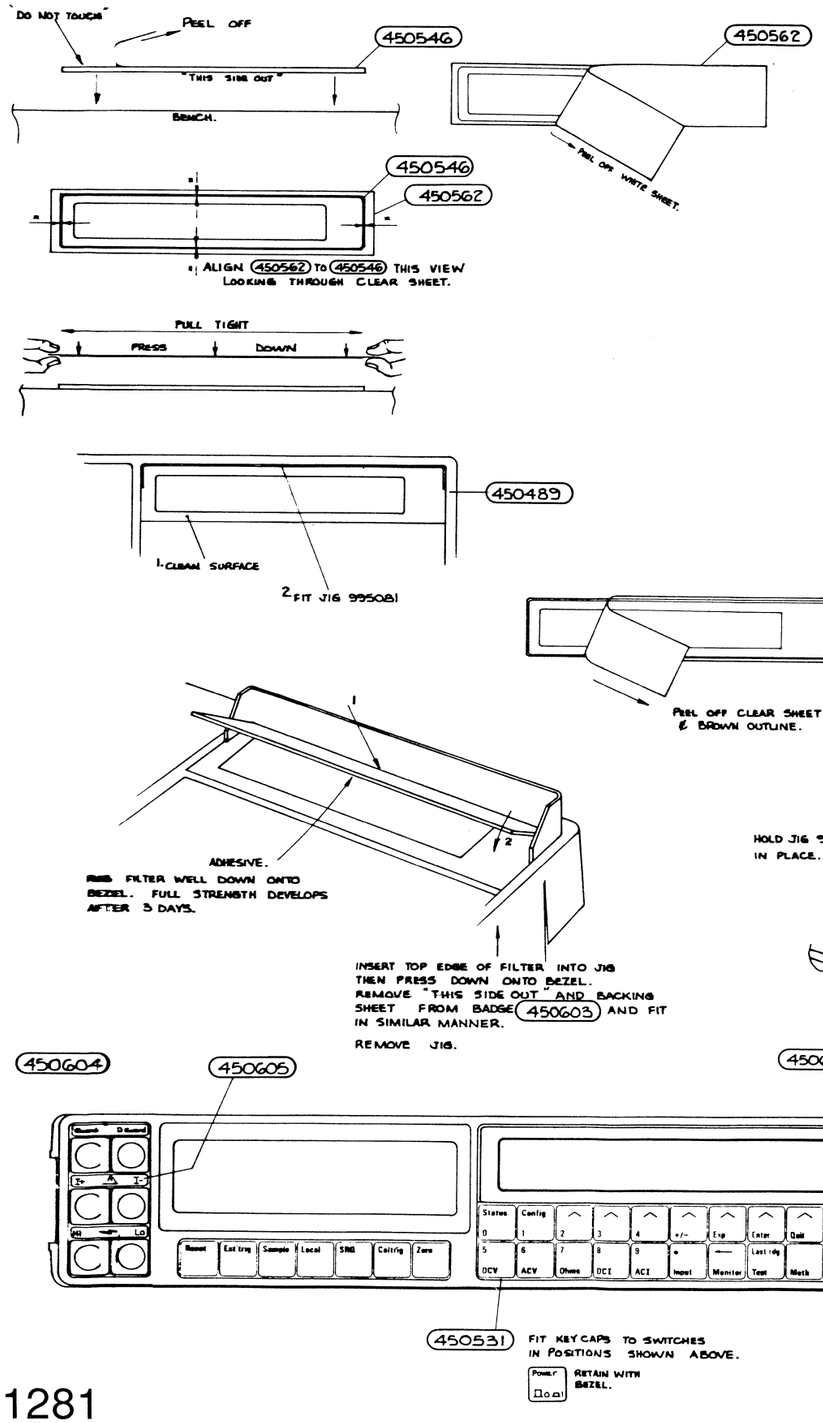

GENERAL NOTES ON FITTING FILTERS & BADGES

1. WIPE ALL SURFACES TO RECEIVE ADHESIVE WITH A CLEAN WIPE MOISTENED WITH 900016.
2. DO NOT TOUCH CLEANED SURFACE - RECLEAN IF ACCIDENTALLY TOUCHED.
3. DO NOT TOUCH ADHESIVE SURFACE.
4. HANDLING OF ADHESIVES 450562 & 450516.
   a) IF CLEAR SHEET SEPERATES FIRST, PRESS BACK AND RUB DOWN. WHITE SHEET WILL THEN SEPERATE.
   b) AFTER REMOVAL OF WHITE SHEET HANDLE ONLY BY ENDS OF CLEAR SHEET.
   c) PULL TIGHT AND ALIGN BEFORE LOWERING TO FILTER SURFACE.
   d) IF MIS-ALIGNED OR UNFLAT THEY MUST BE ENTIRELY REMOVED (RUB WITH FINGER), THE SURFACE CLEANED AND NEW ADHESIVE APPLIED.
5. HANDLE JIGS WITH GREAT CARE - THEY ARE FRAGILE. IF BENT THE JIGS WILL NOT ALIGN PARTS CORRECTLY.

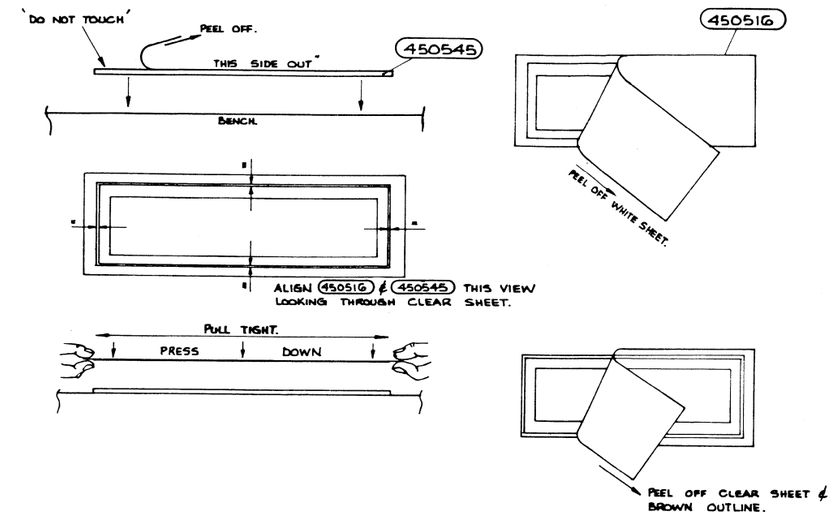

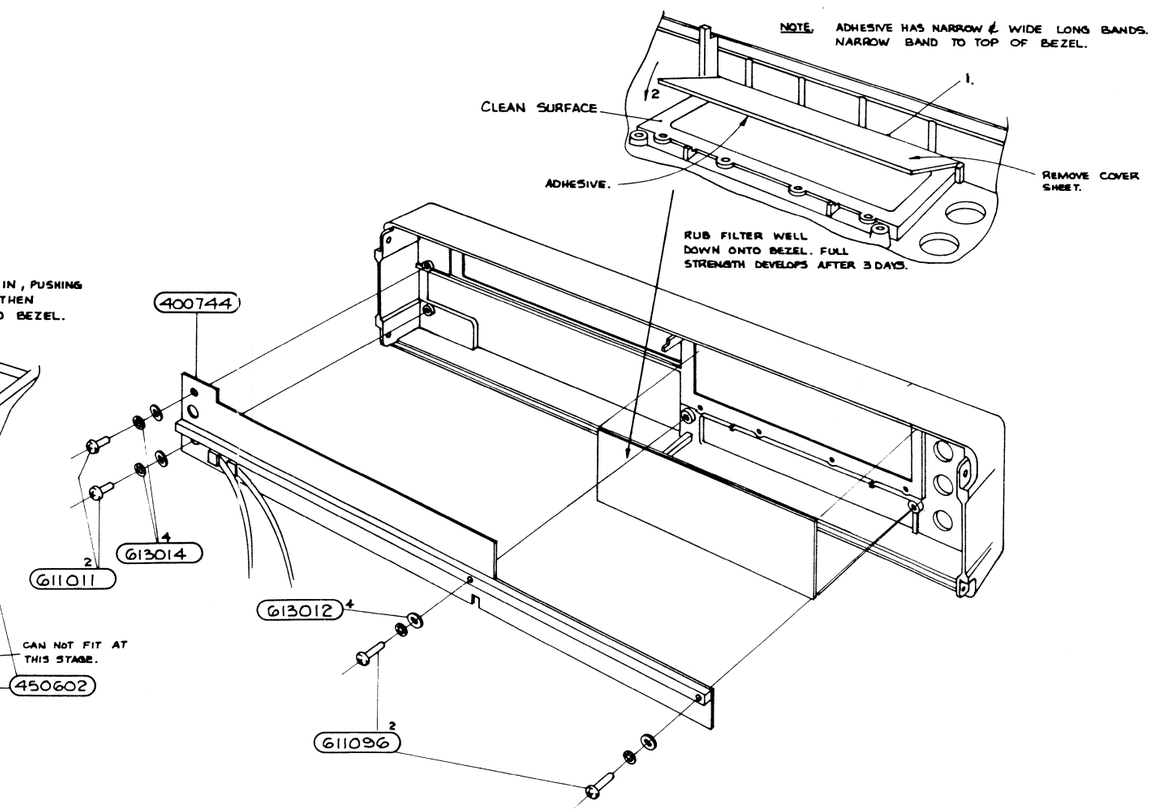

1281

datron WAVETEK

© Datron Instruments 1989

BEZEL ASSEMBLY

Drawing No. 480745 **Sheet 1**

OPERATION 1

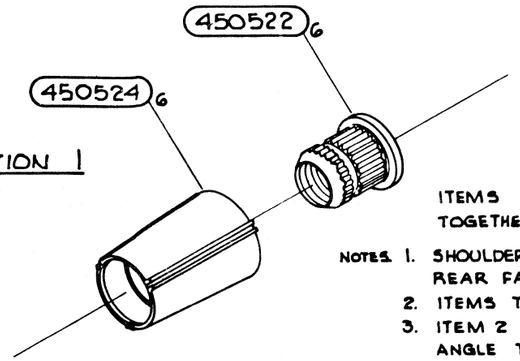

ASSEMBLED VIEW.

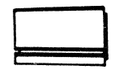

ITEMS 1 & 2 TO BE HEATSTAKED TOGETHER.

NOTES 1. SHOULDER ITEM 2 TO SIT FLAT ON REAR FACE ITEM 1.
2. ITEMS TO BE CONCENTRIC.
3. ITEM 2 NOT TO BE INSERTED AT AN ANGLE TO ITEM 1.
4. SEE DRG. 995031 FOR SUGGESTED TOOL OUTLINES.

OPERATION 2

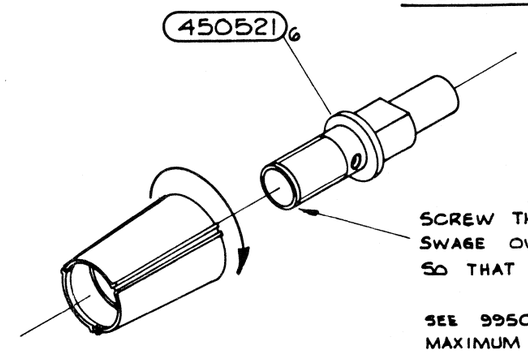

SCREW THESE TWO PARTS TOGETHER AND SWAGE OVER THE END OF TERMINAL SPINDLE (3) SO THAT TERMINAL BODY CAN NOT BE REMOVED.

SEE 995032 FOR SUGGESTED TOOL OUTLINE.
MAXIMUM AXIAL FORCE : 50 Kg.

OPERATION 3

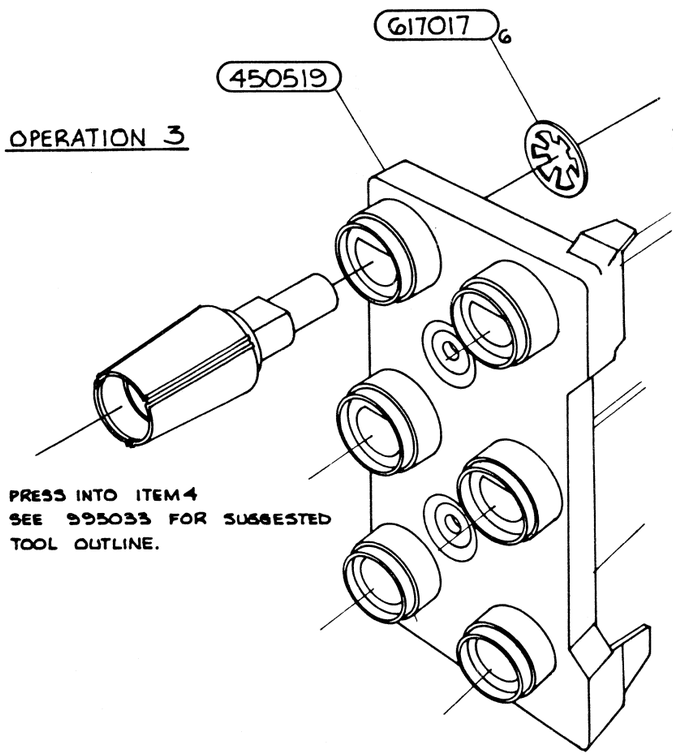

SEE 995034 FOR SUGGESTED TOOL OUTLINE TO PRESS ITEM 5 IN PLACE.

TERMINAL MUST BE RIGID TO ITEM 4 AFTER ASSEMBLY.

PRESS INTO ITEM 4
SEE 995033 FOR SUGGESTED TOOL OUTLINE.

OPERATION 4.

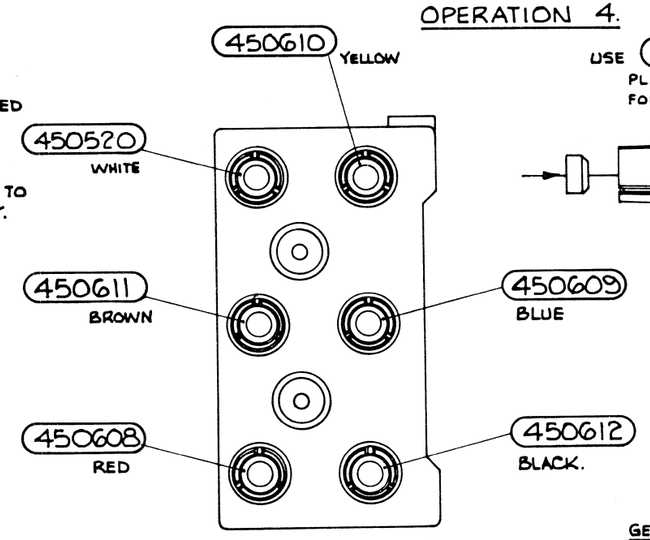

USE (900038.) TO SECURE COLOUR RINGS IN PLACE. APPLY LIGHT PRESSURE (0·25-0·5 KG) FOR 10 SECS. TO ALLOW ADHESIVE TO SET.

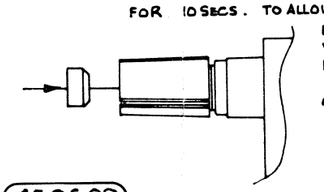

NO SURPLUS ADHESIVE TO BE VISIBLE AFTER ASSEMBLY. REFER TO MANUFACTURERS INFORMATION FOR REMOVAL OF EXCESS ADHESIVE.

GENERAL. PLASTIC COMPONENTS NOT TO BE DAMAGED BY ASSEMBLY PROCESS. USE OF SUGGESTED TOOLS IS RECOMMENDED.
ALL TERMINALS TO BE PERPENDICULAR TO BASE AND RUN TRUE ON THREADS.

1281

datron WAVETEK

TERMINAL MECHANICAL ASSEMBLY

Drawing No. 480746 **Sheet 1**

© Datron Instruments 1989

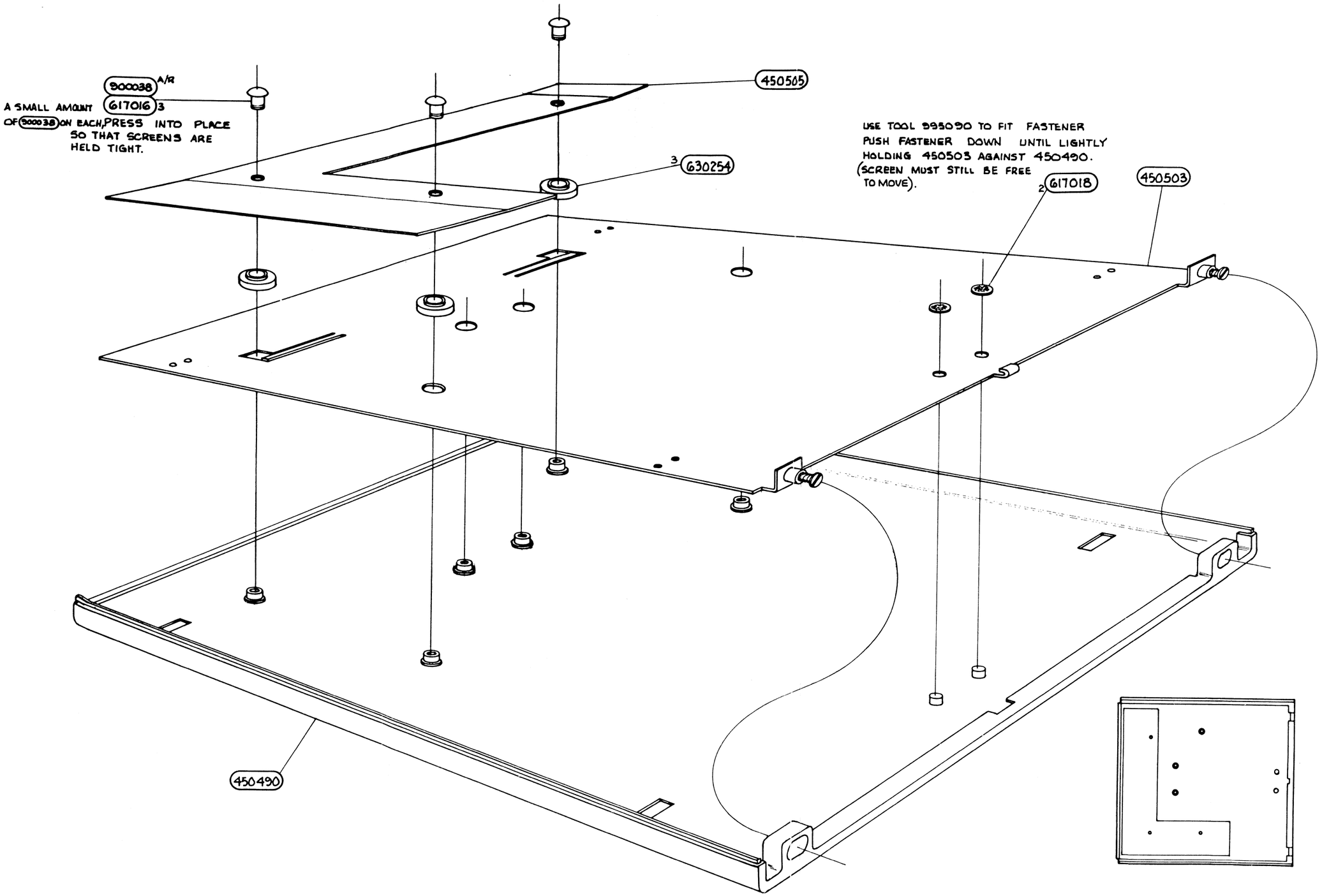

1281

datron WAVETEK

© Datron Instruments 1989

TOP COVER ASSEMBLY

Drawing No. 480747 Sheet 1

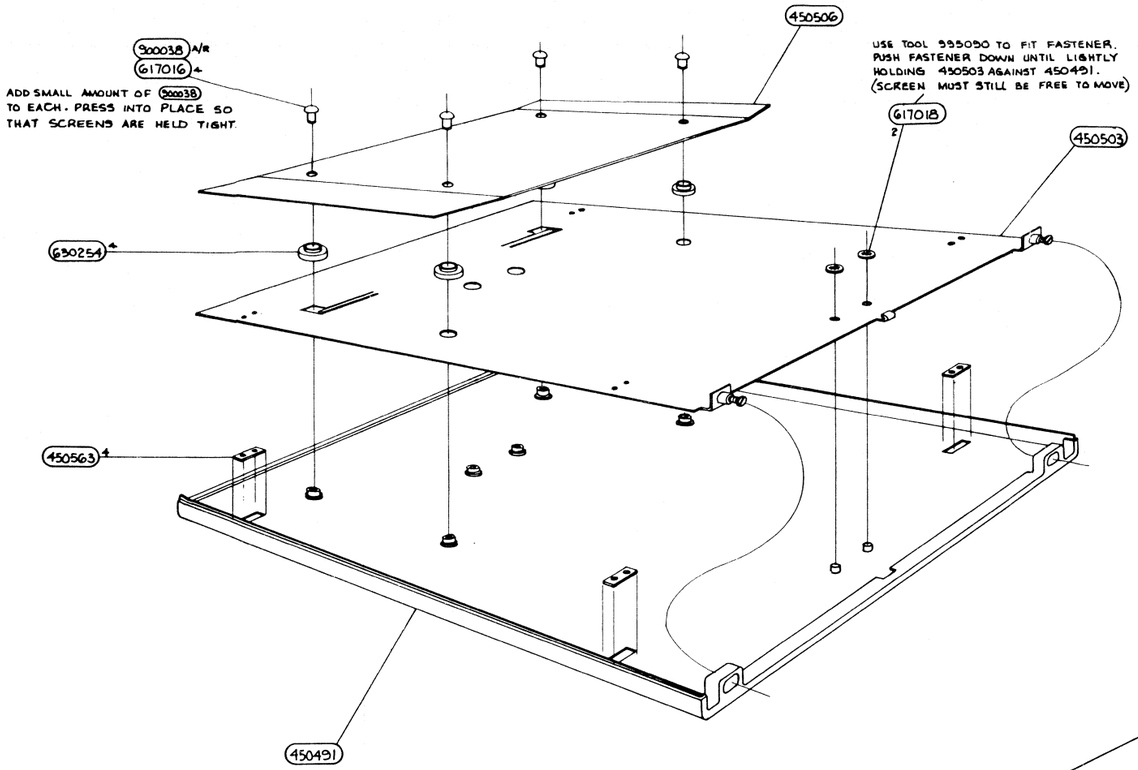

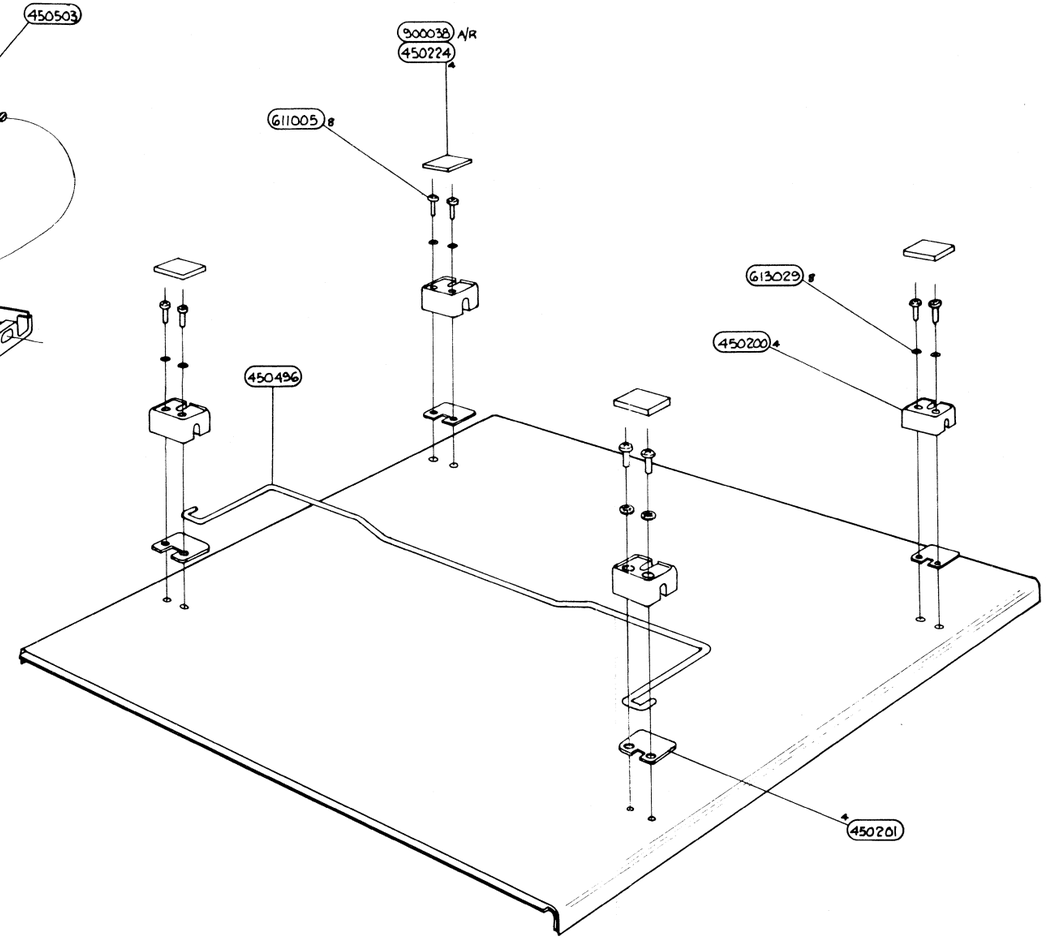

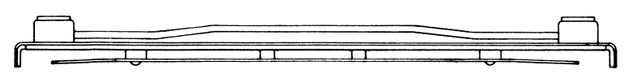

VIEW FROM FRONT OF COVER. NOTE DIRECTION OF BEND OF 450506 GUARD SCREEN AND 450496 TILT STAND.

1281

datron WAVETEK

BOTTOM COVER ASSEMBLY

Drawing No. 480748 Sheet 1

© Datron Instruments 1989

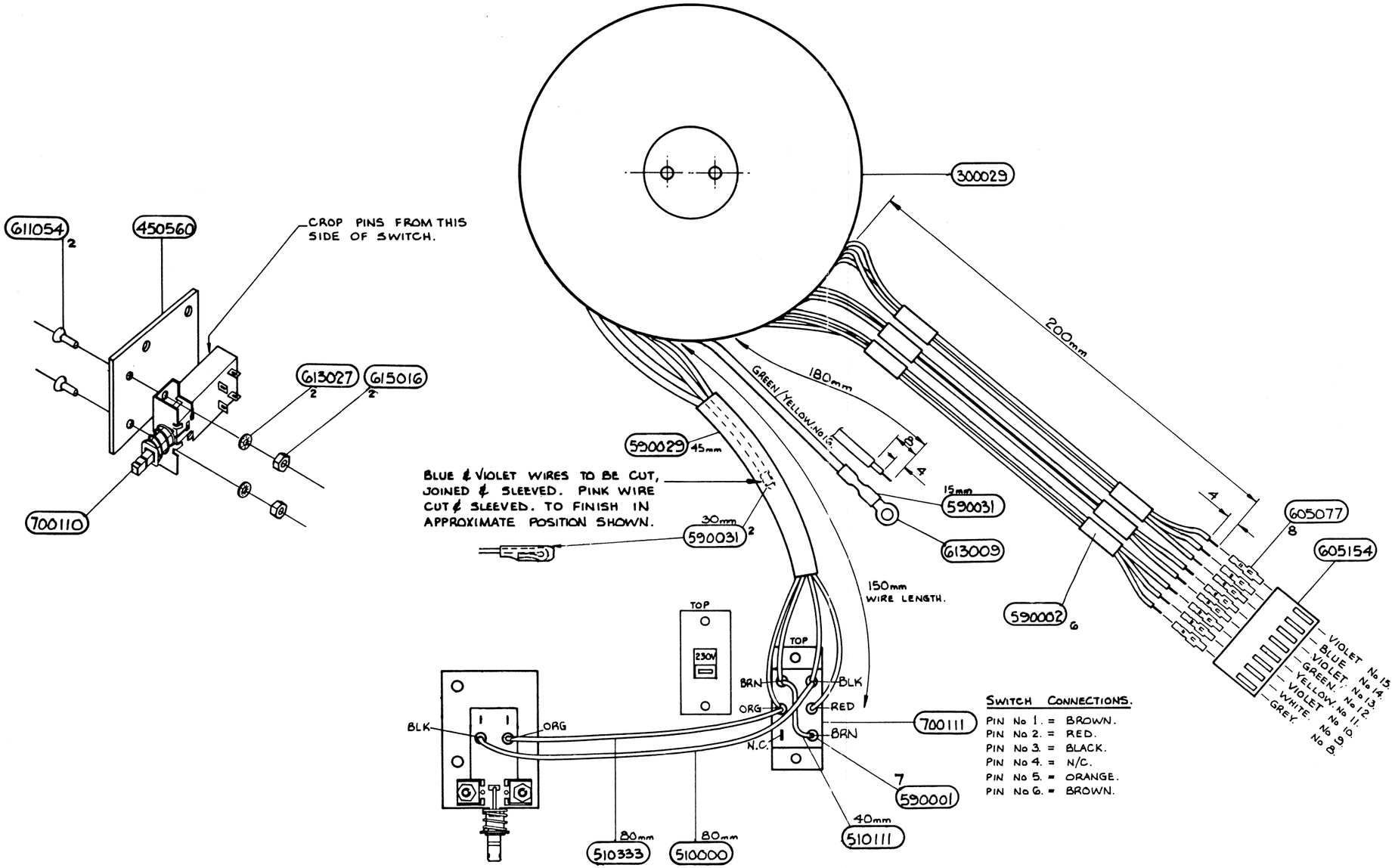

CRIMP TOOL FOR 605077 MOLEX HTR 2445A

1281

datron WAVETEK

© Datron Instruments 1989

MAINS TRANSFORMER ASSEMBLY

Drawing No. 480749 **Sheet 1**

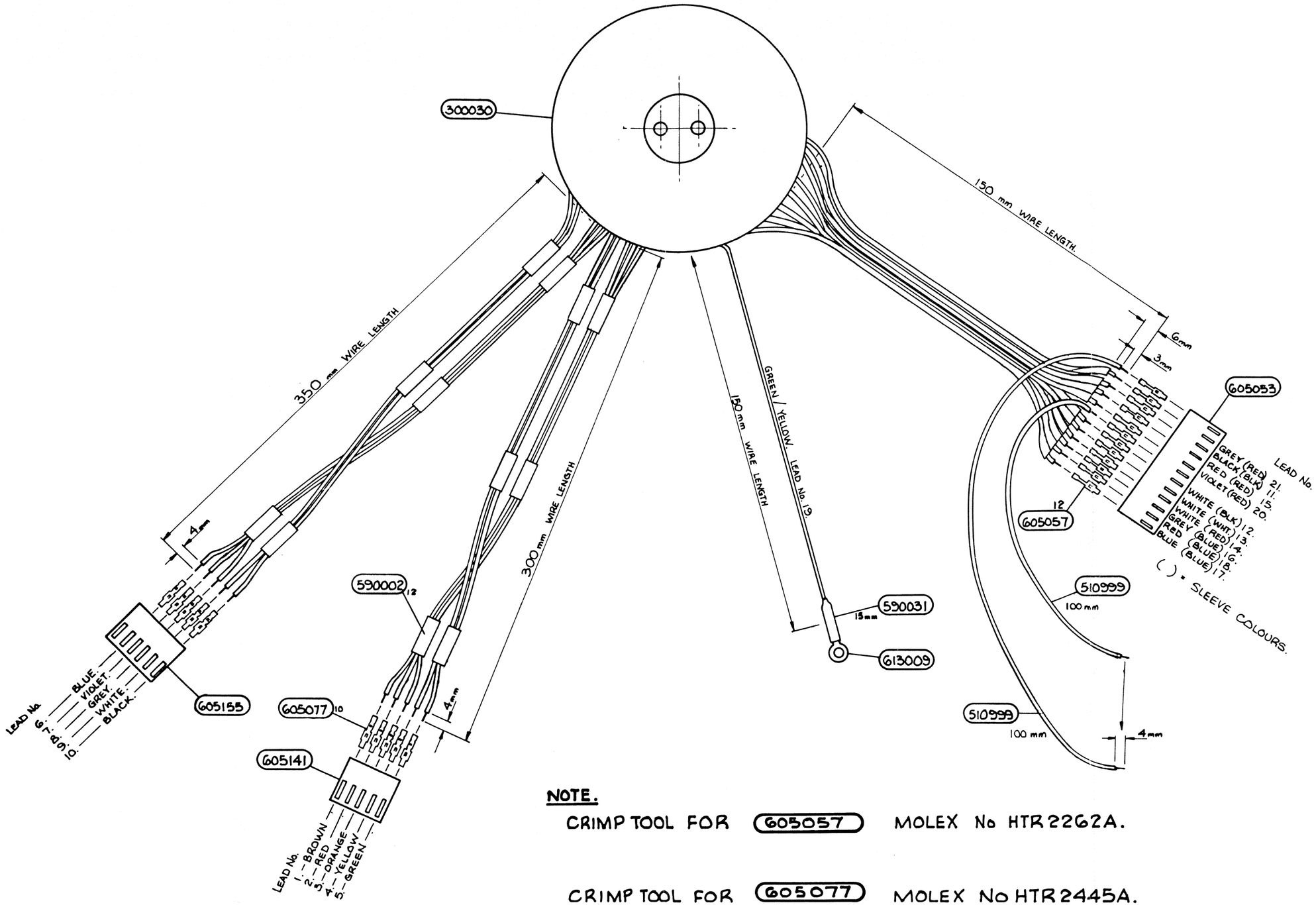

NOTE.

CRIMP TOOL FOR (605057) MOLEX No HTR2262A.

CRIMP TOOL FOR (605077) MOLEX No HTR2445A.

1281

datron WAVETEK

LOW VOLTAGE TRANSFORMER ASSEMBLY

Drawing No. 480750 **Sheet 1**

© Datron Instruments 1989

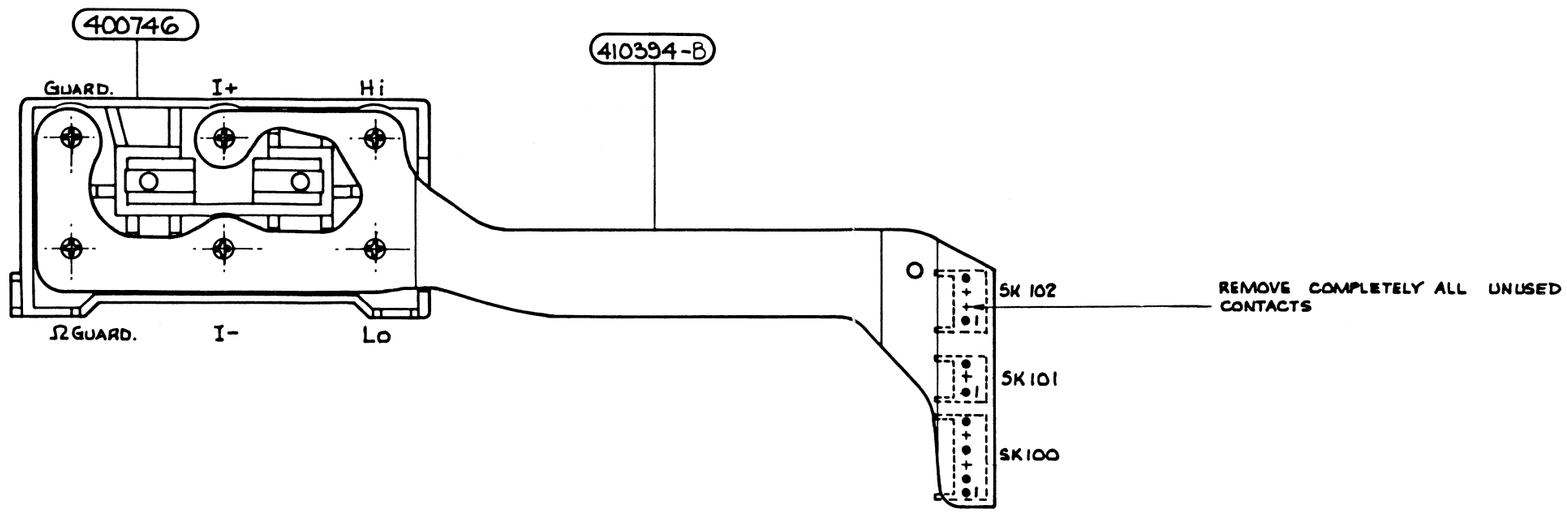

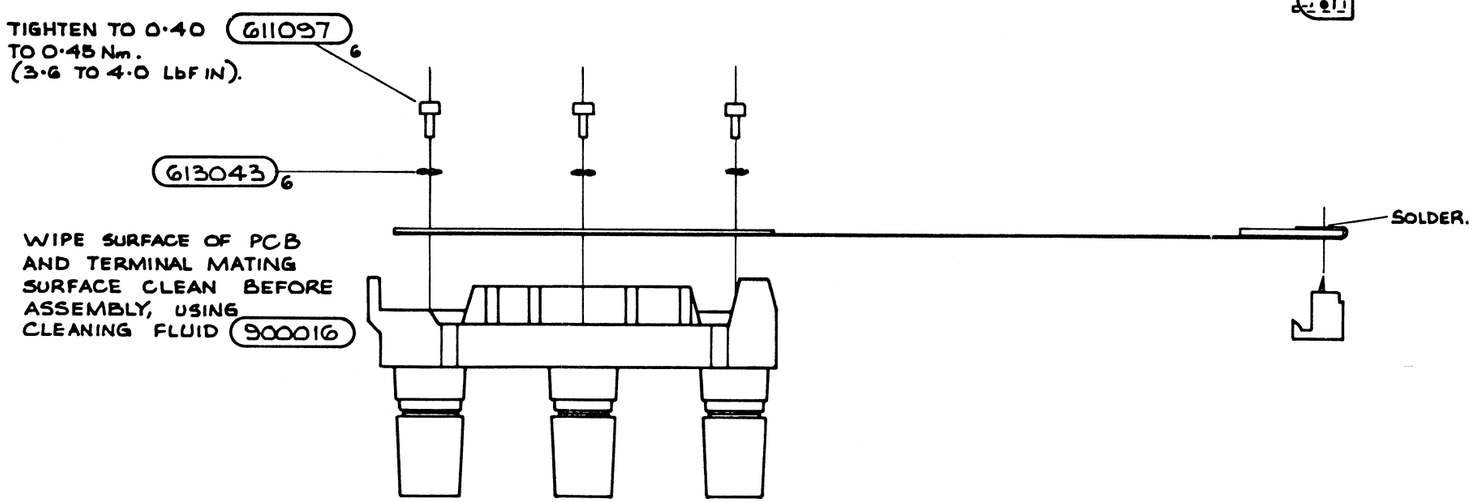

1281

datron WAVETEK

© Datron Instruments 1989

TERMINAL ASSEMBLY

Drawing No. 480770 Sheet 1

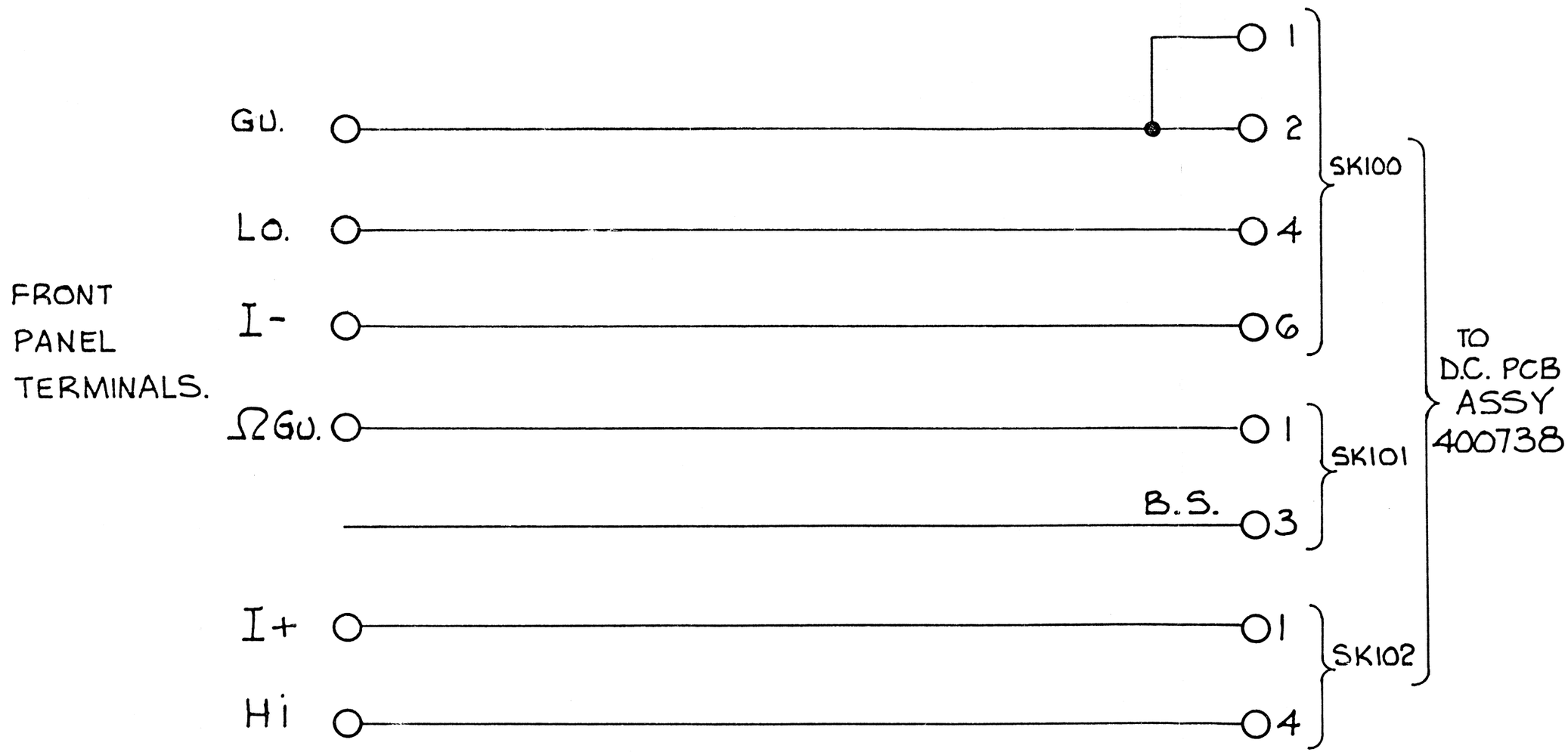

1281

TERMINAL ASSEMBLY

Drawing No. 430770 **Sheet 1**

datron WAVETEK

© Datron Instruments 1989

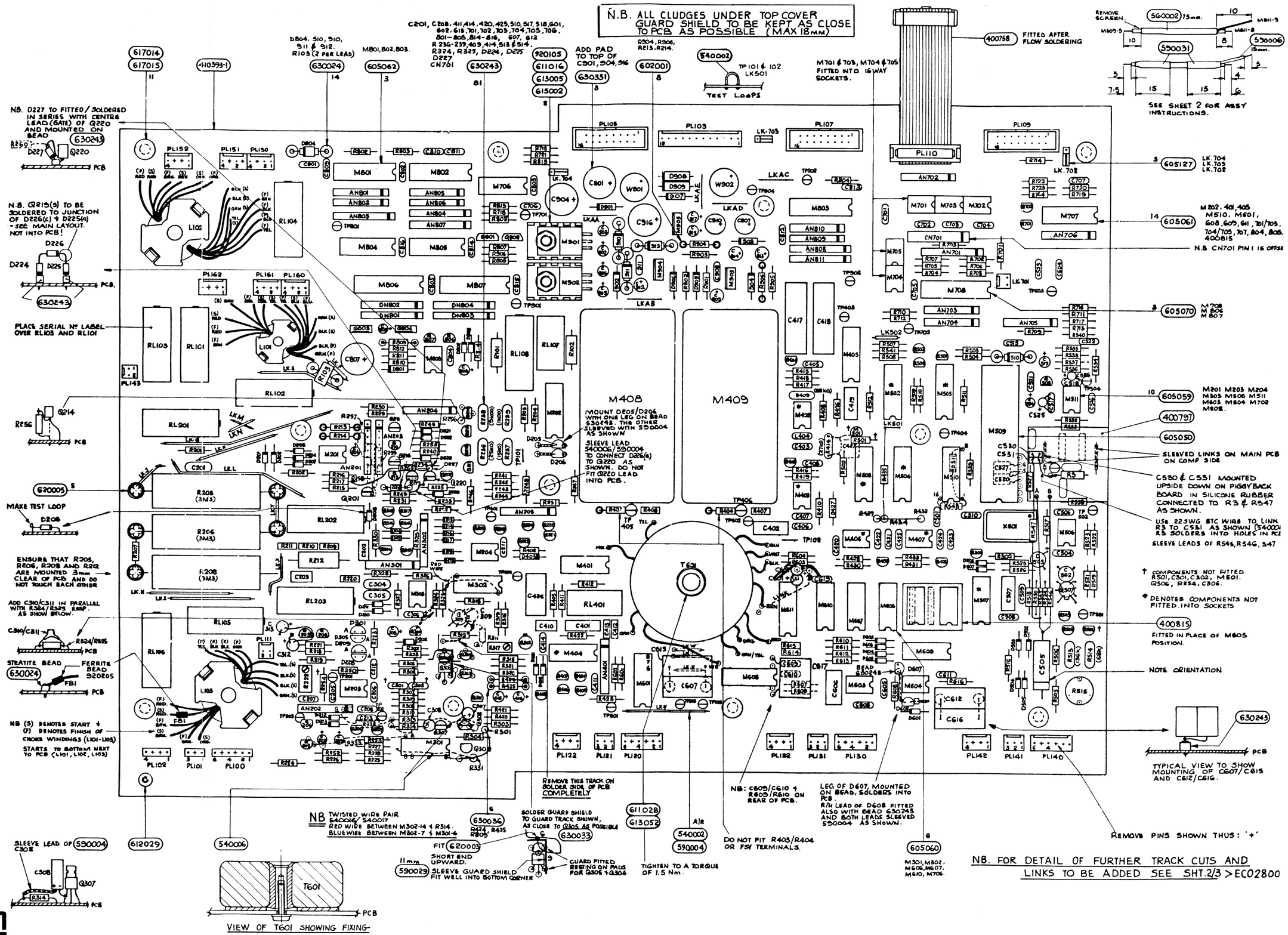

1281

datron WAVETEK

© Datron Instruments 1989

D.C. ASSEMBLY

Drawing No. 480738 Sheet 1

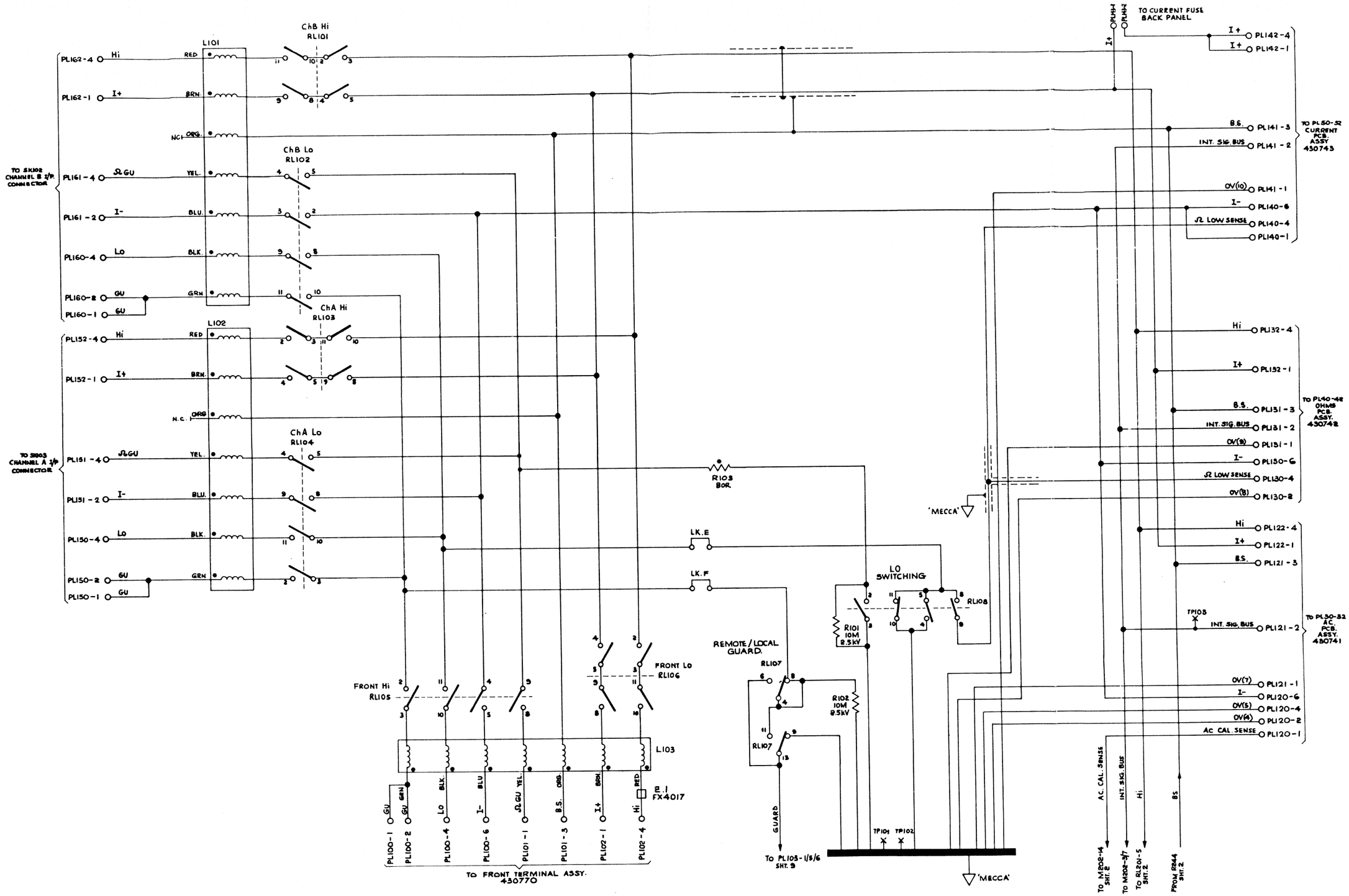

1281

D.C. ASSEMBLY

Input Signal Switching

Drawing No. 430738 **Sheet 1 of 9**

datron WAVETEK

© Datron Instruments 1989

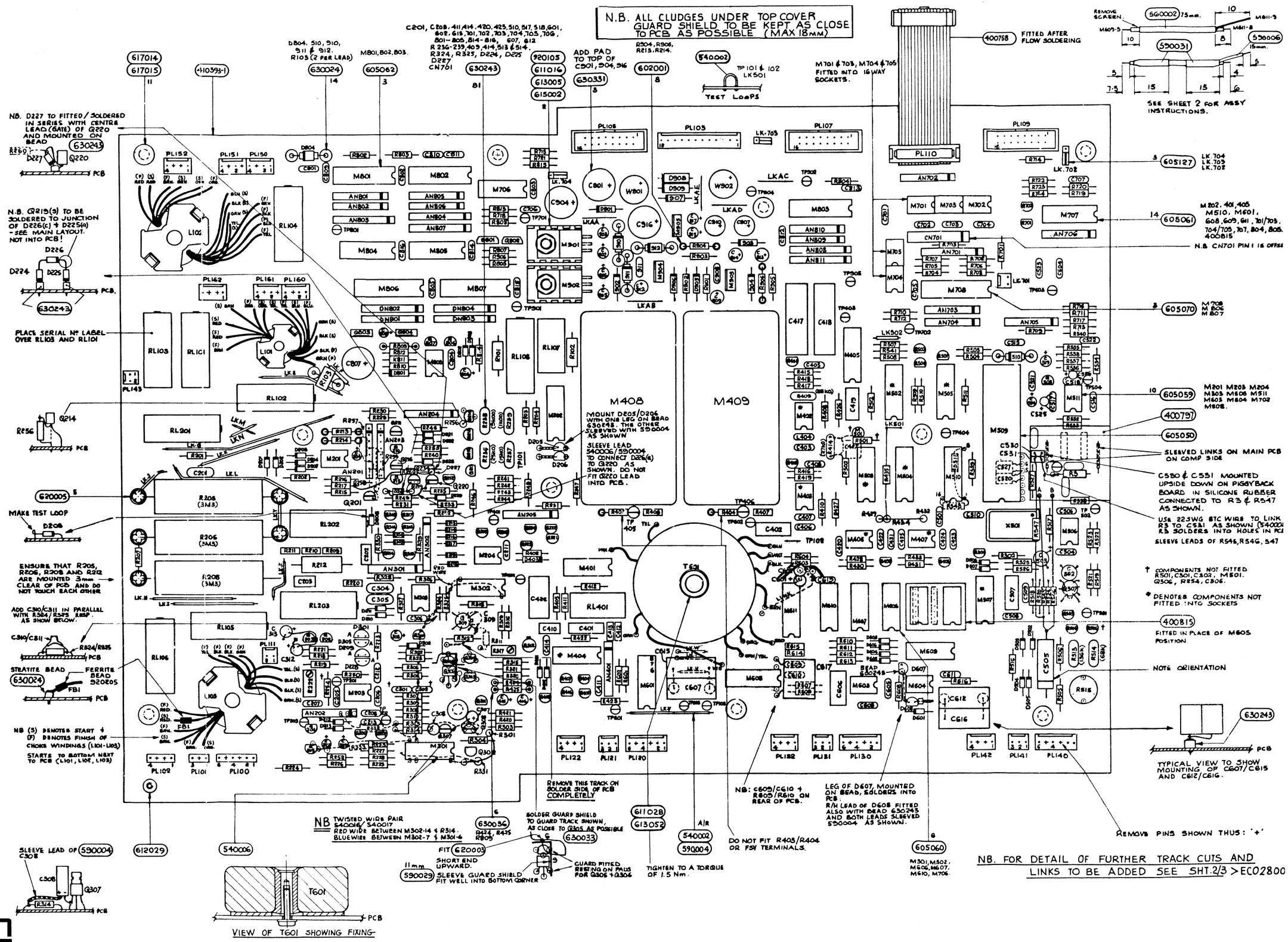

1281

datron WAVETEK

© Datron Instruments 1989

D.C. ASSEMBLY

Drawing No. 480738 Sheet 1

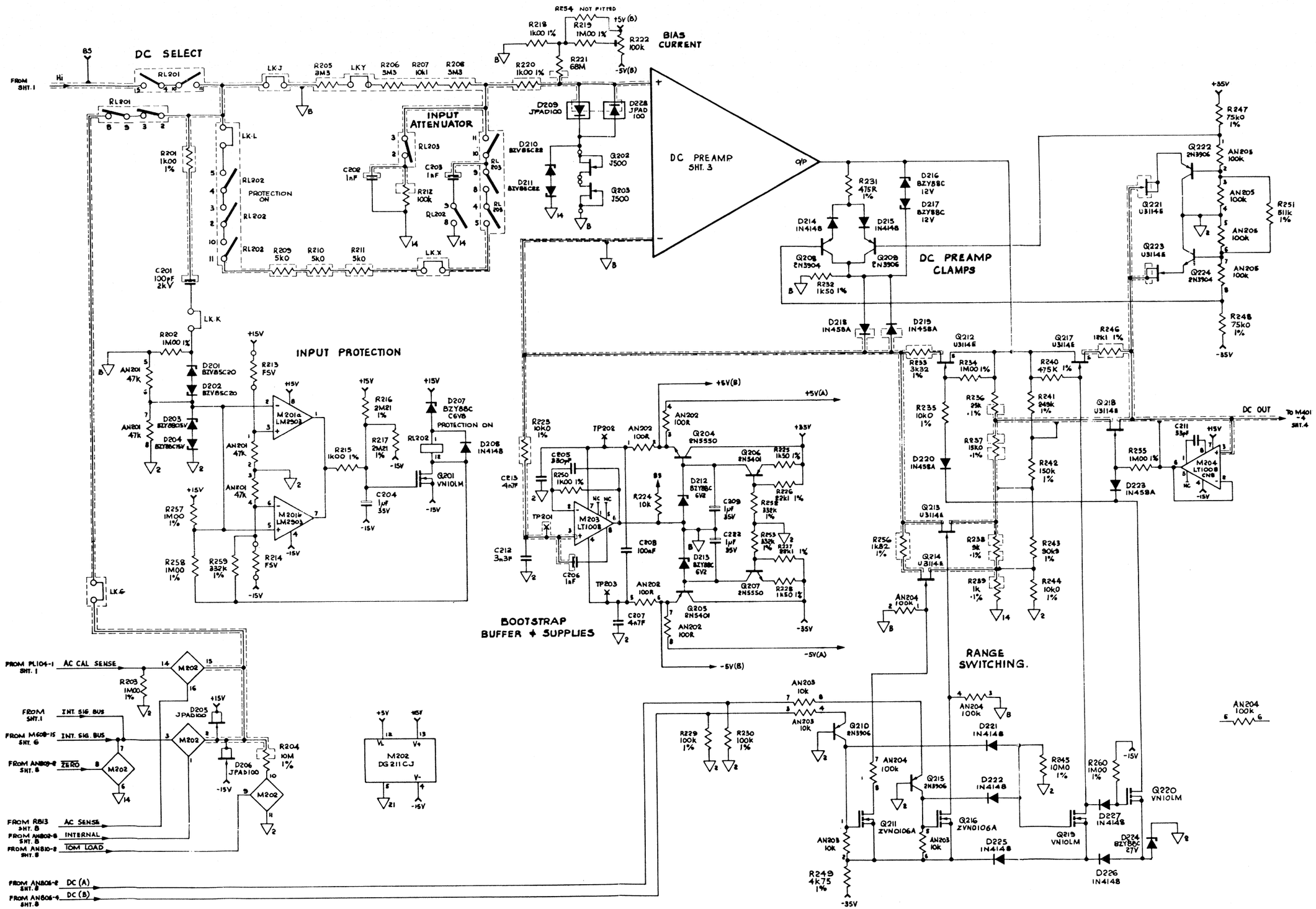

D.C. ASSEMBLY

D.C. Switching, Protection and Ranging

Drawing No. 430738 **Sheet 2 of 9**

1281

datron WAVETEK

© Datron Instruments 1989

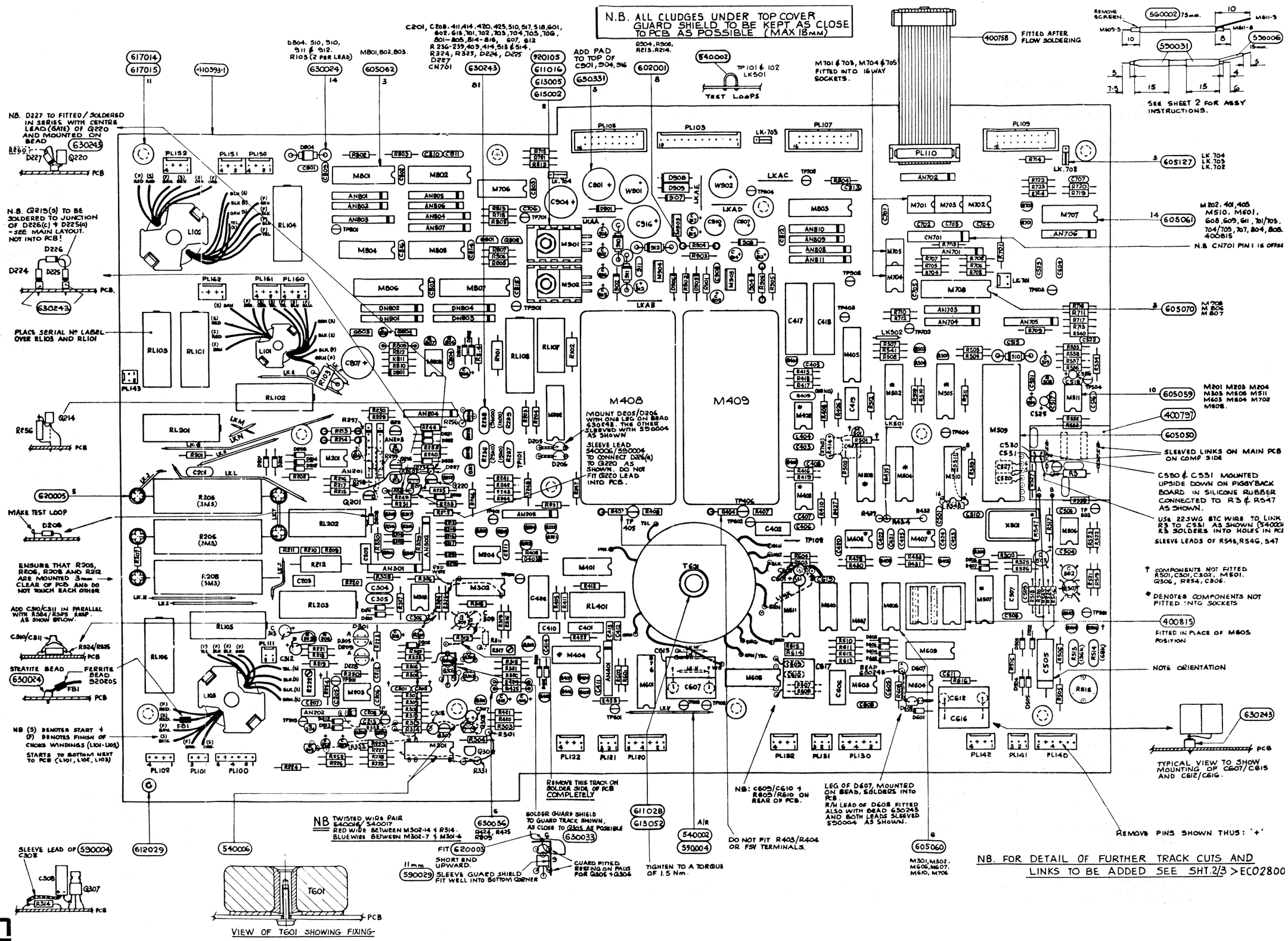

1281

datron WAVETEK

© Datron Instruments 1989

D.C. ASSEMBLY

Drawing No. 480738 Sheet 1

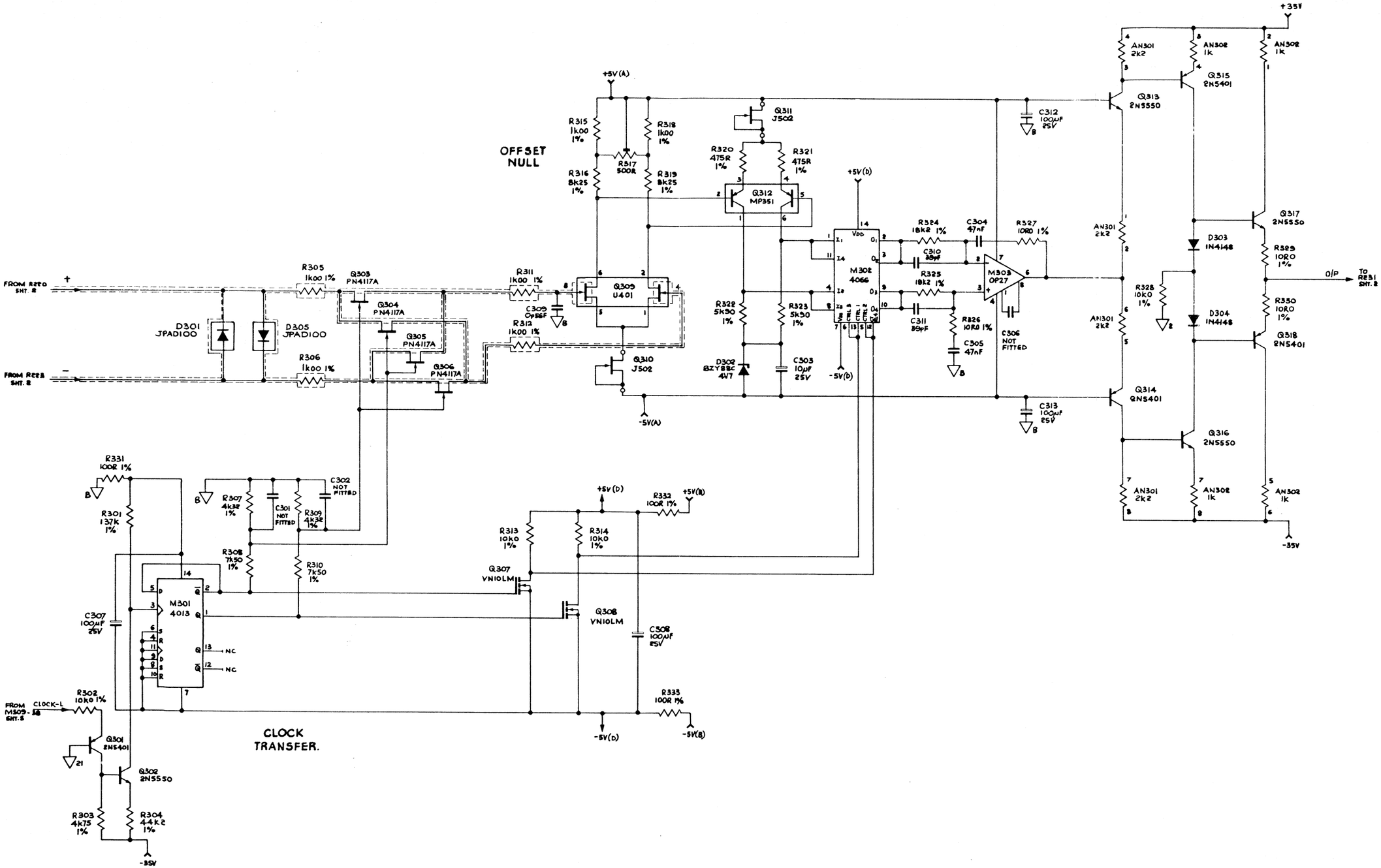

D.C. ASSEMBLY

D.C. Preamplifier

Drawing No. 430738 **Sheet 3 of 9**

1281

datron WAVETEK

© Datron Instruments 1989

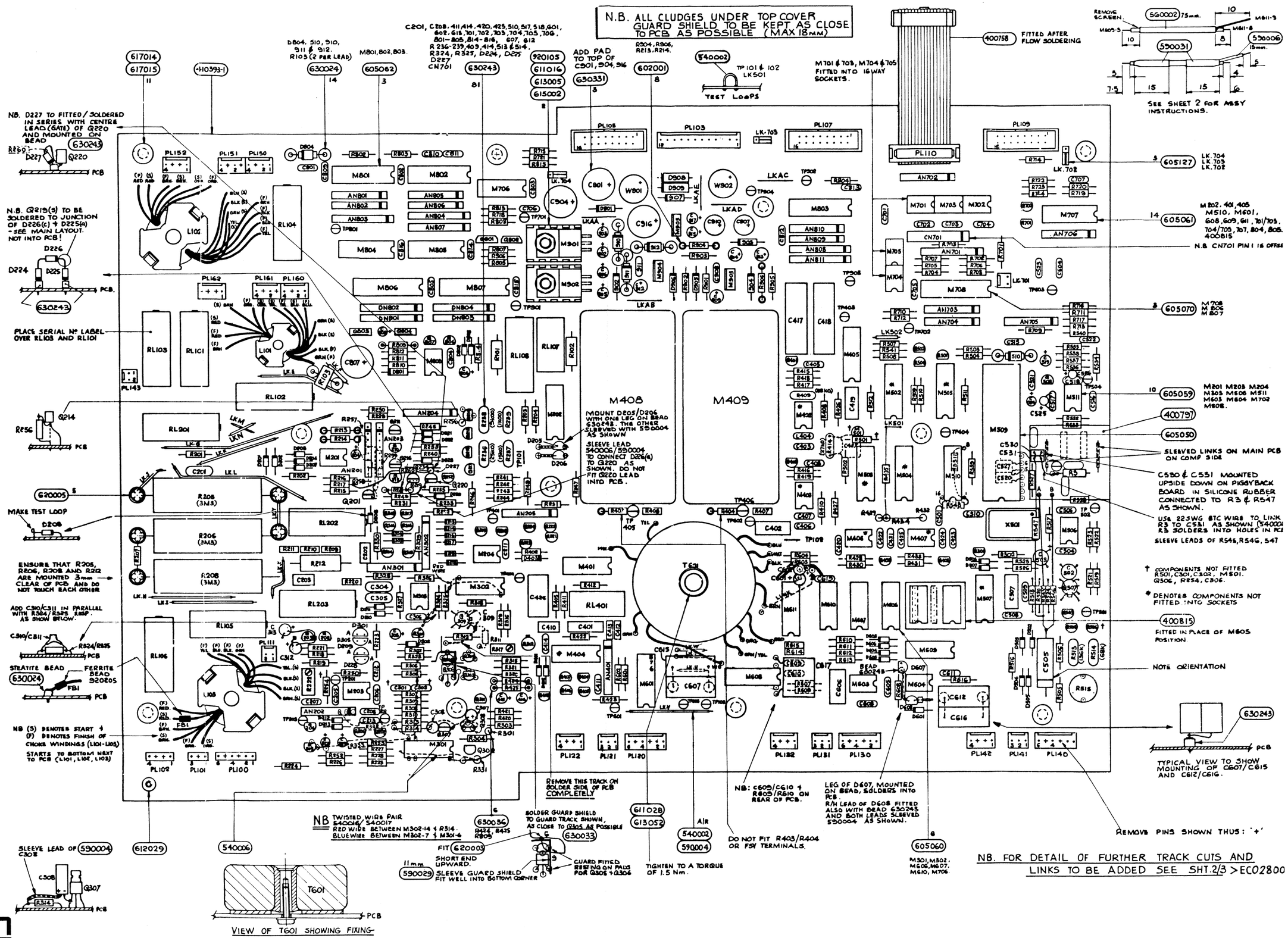

1281

datron WAVETEK

© Datron Instruments 1989

D.C. ASSEMBLY

Drawing No. 480738 Sheet 1

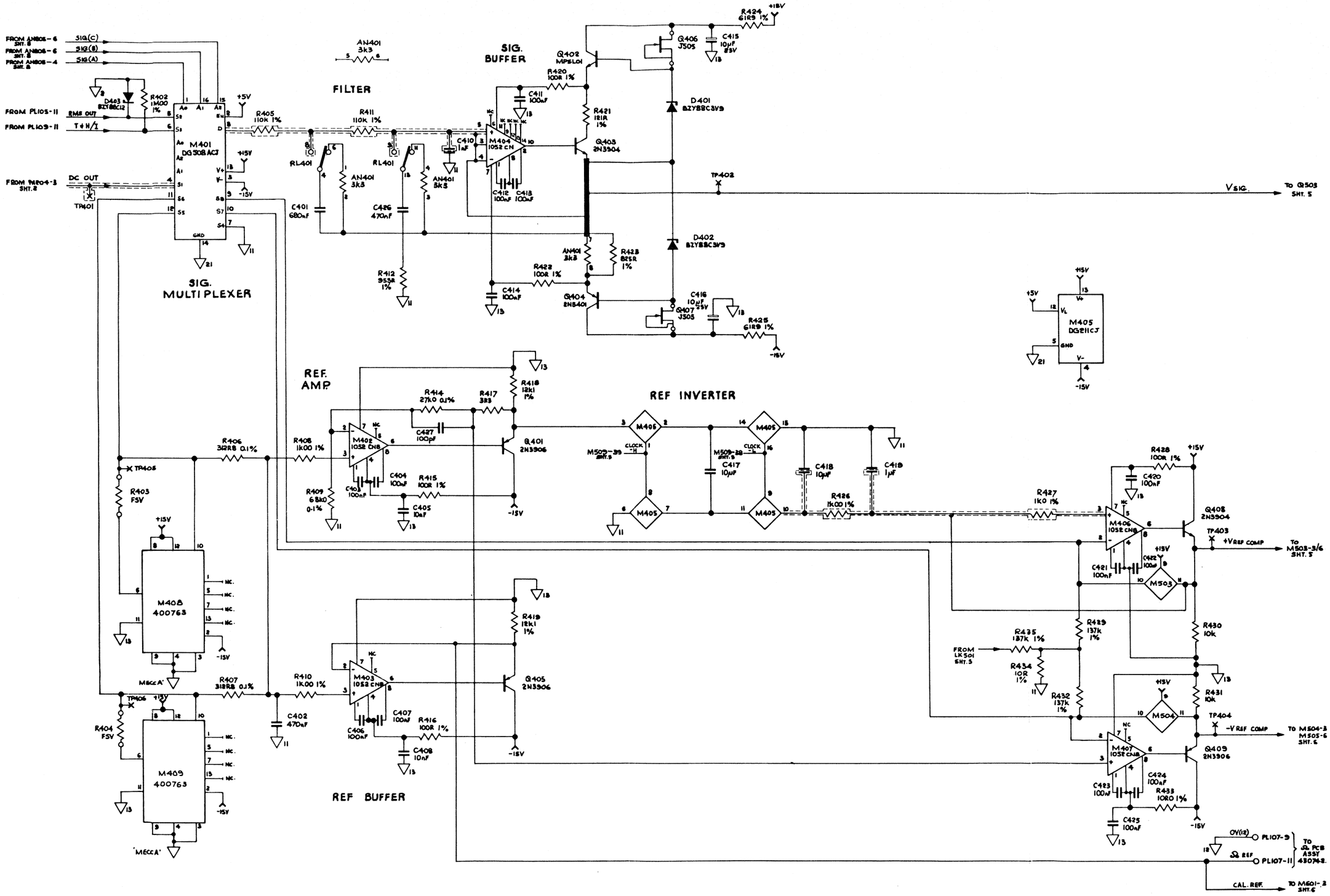

1281

D.C. ASSEMBLY

References and Signal Switching

Drawing No. 430738 **Sheet 4 of 9**

datron WAVETEK

© Datron Instruments 1989

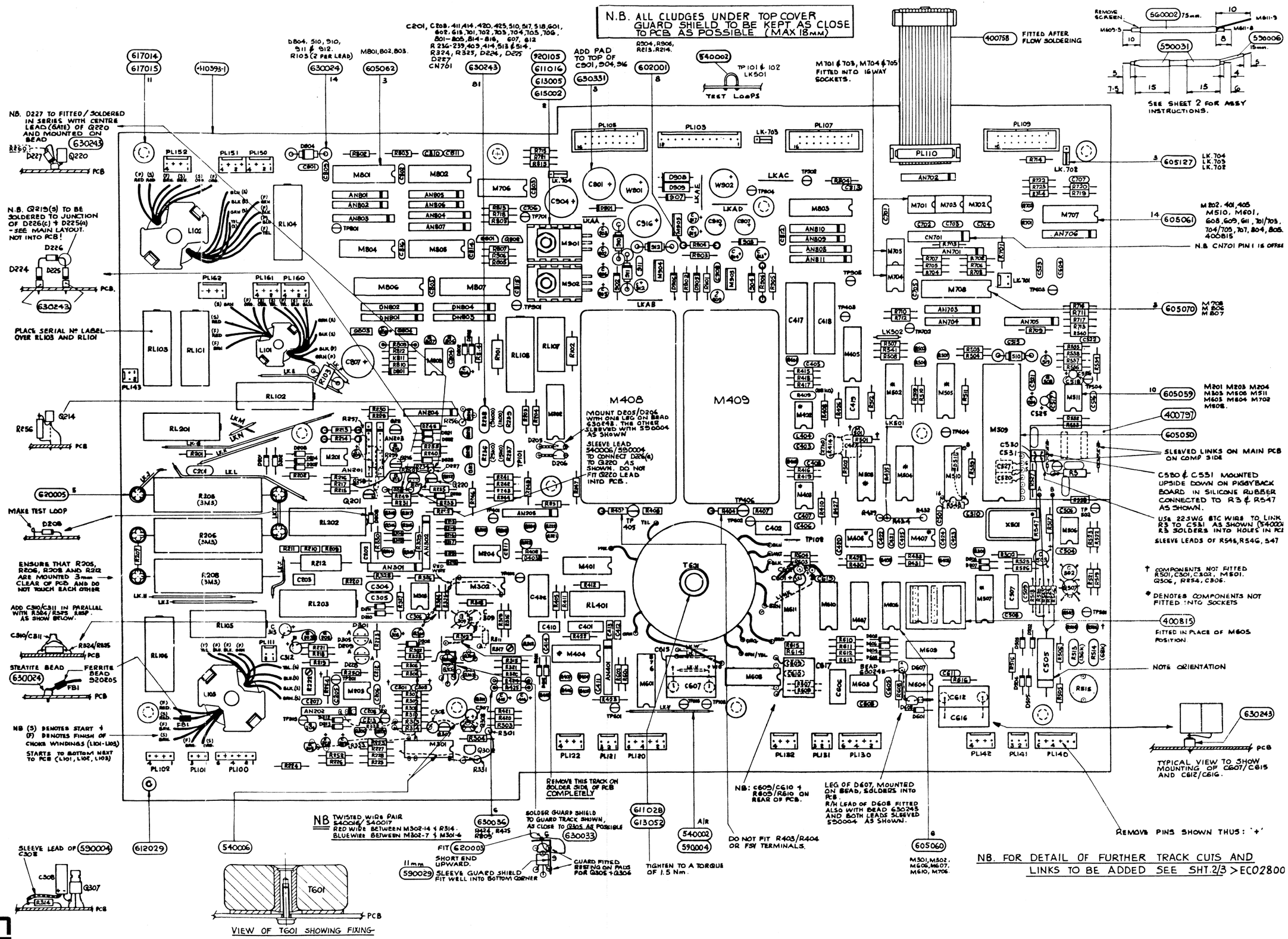

1281

datron WAVETEK

© Datron Instruments 1989

D.C. ASSEMBLY

Drawing No. 480738 Sheet 1

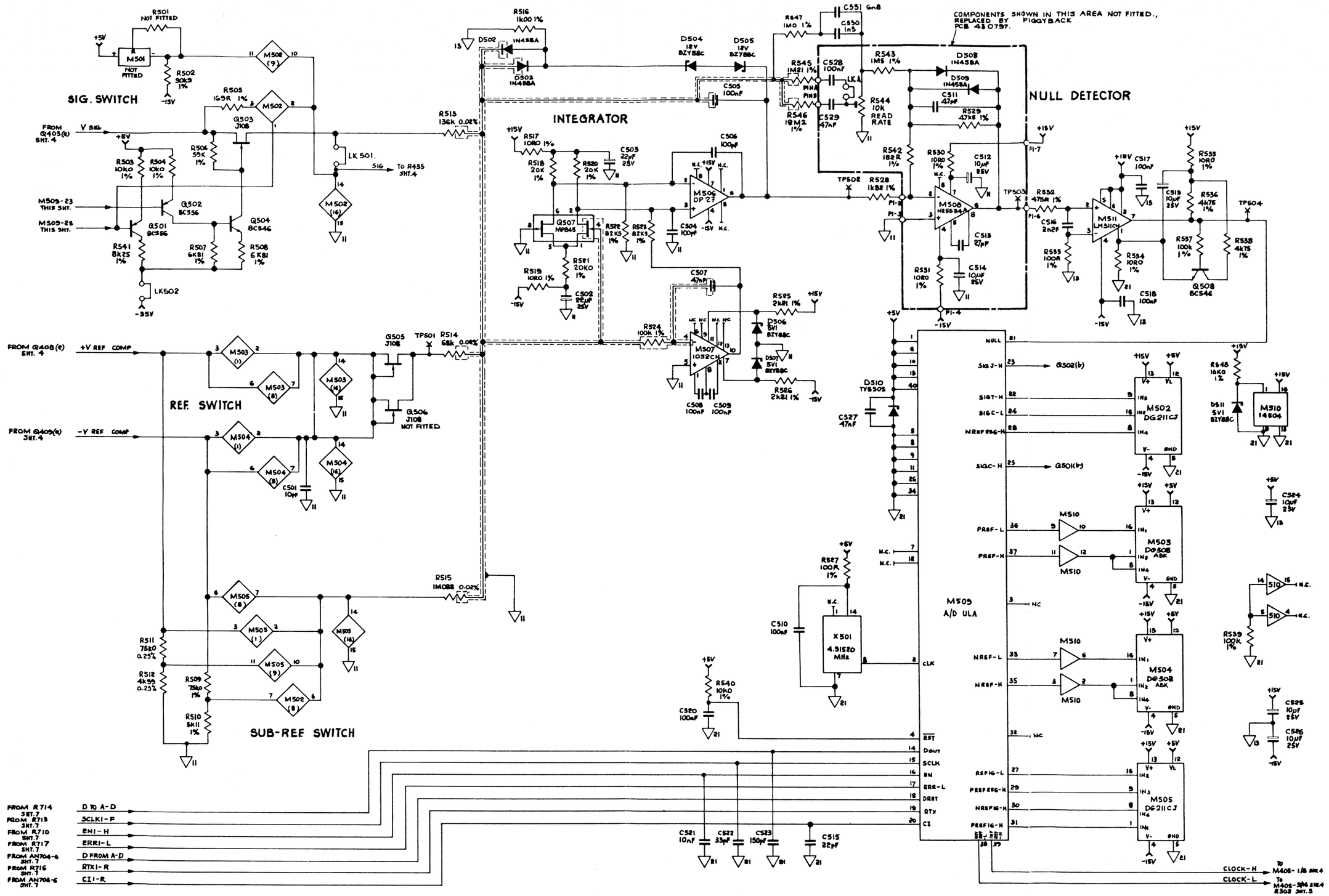

1281

D.C. ASSEMBLY

Analog to Digital Converter

Drawing No. 430738 **Sheet 5 of 9**

© Datron Instruments 1989

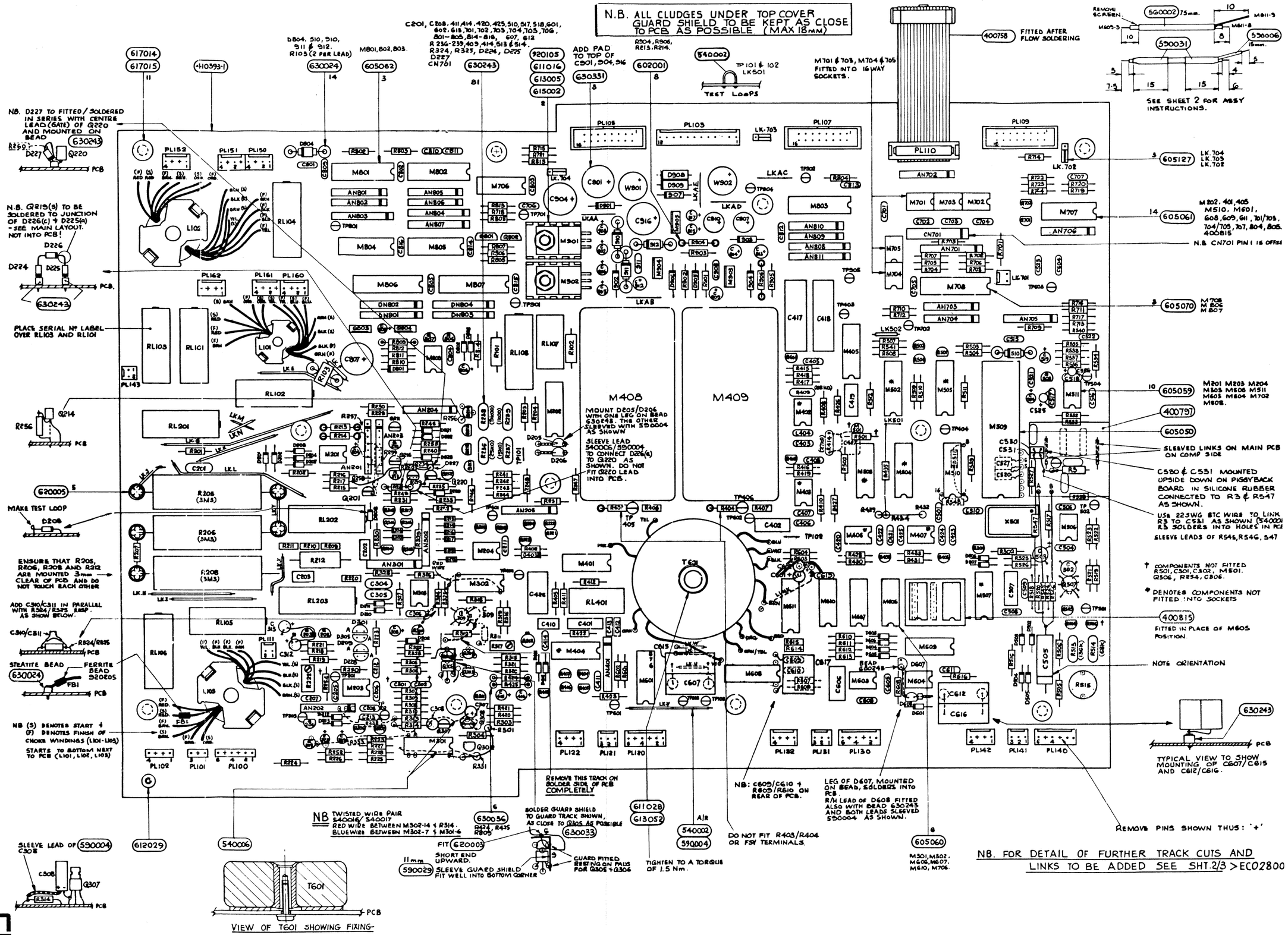

1281

datron WAVETEK

© Datron Instruments 1989

D.C. ASSEMBLY

Drawing No. 480738 Sheet 1

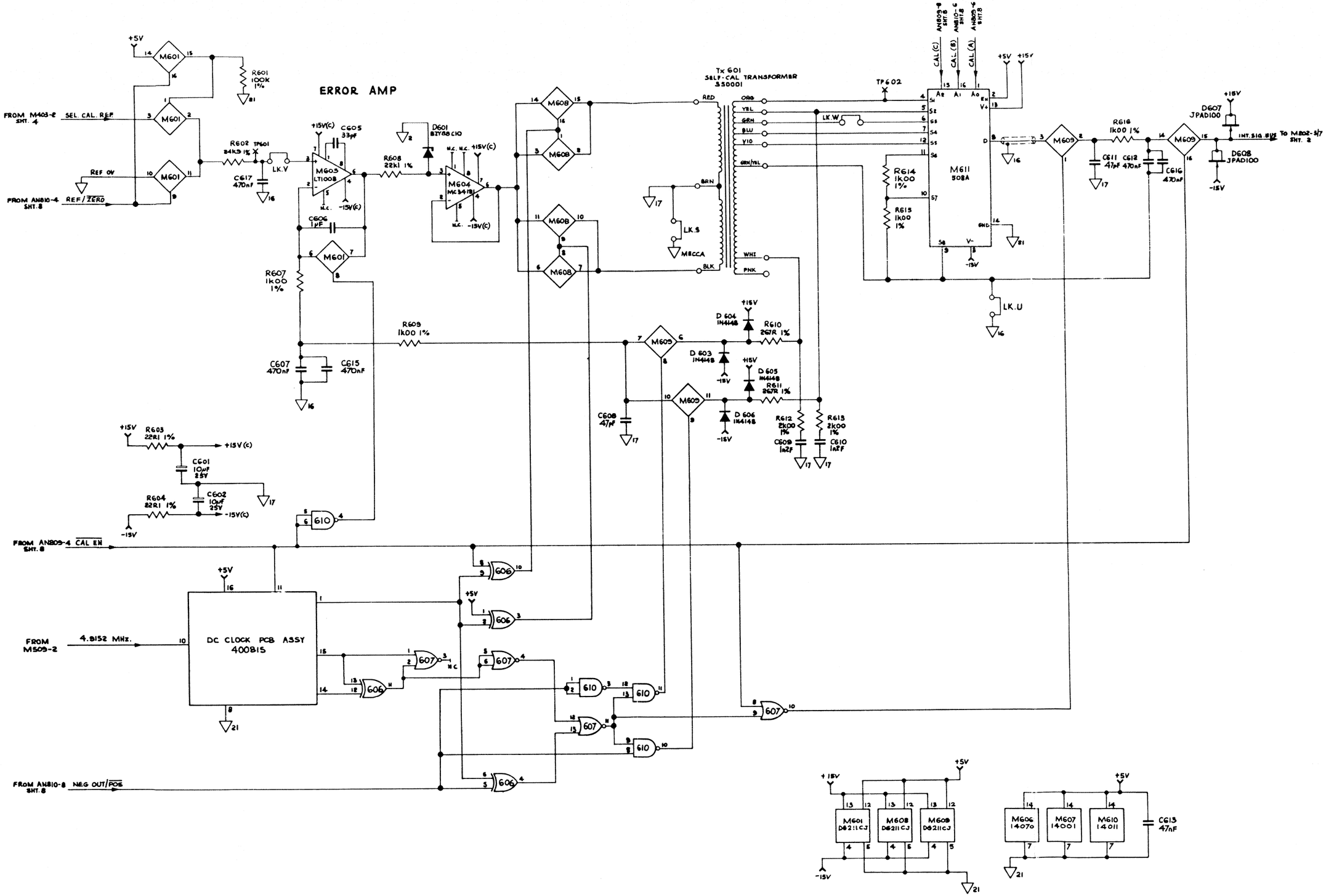

D.C. ASSEMBLY

Selfcal Multiplier

Drawing No. 430738 **Sheet 6 of 9**

1281

datron WAVETEK

© Datron Instruments 1989

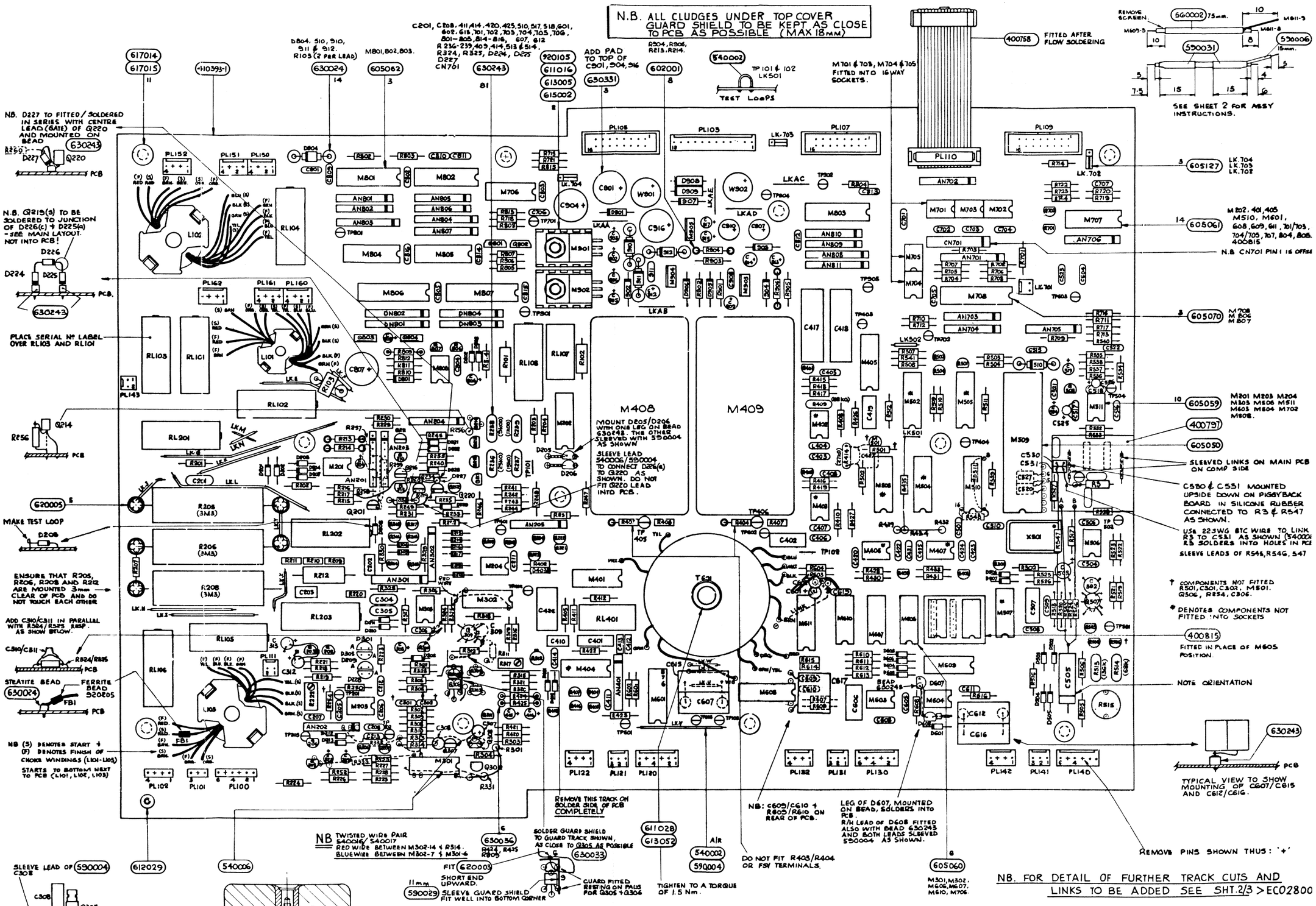

1281

datron WAVETEK

© Datron Instruments 1989

D.C. ASSEMBLY

Drawing No. 480738 Sheet 1

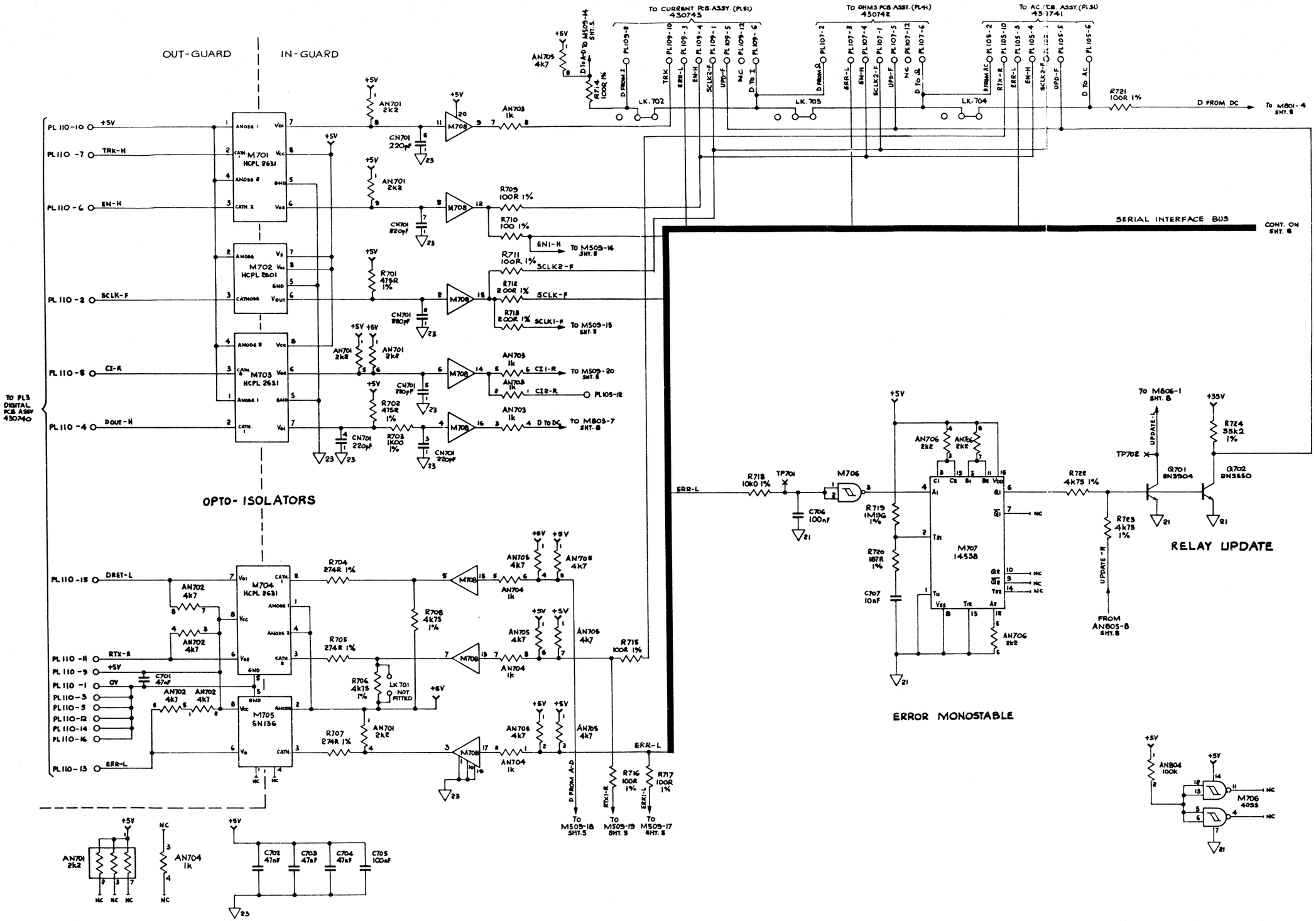

D.C. ASSEMBLY

Opto Isolators and Relay Update

Drawing No. 430738 **Sheet 7 of 9**

1281

datron WAVETEK

© Datron Instruments 1989

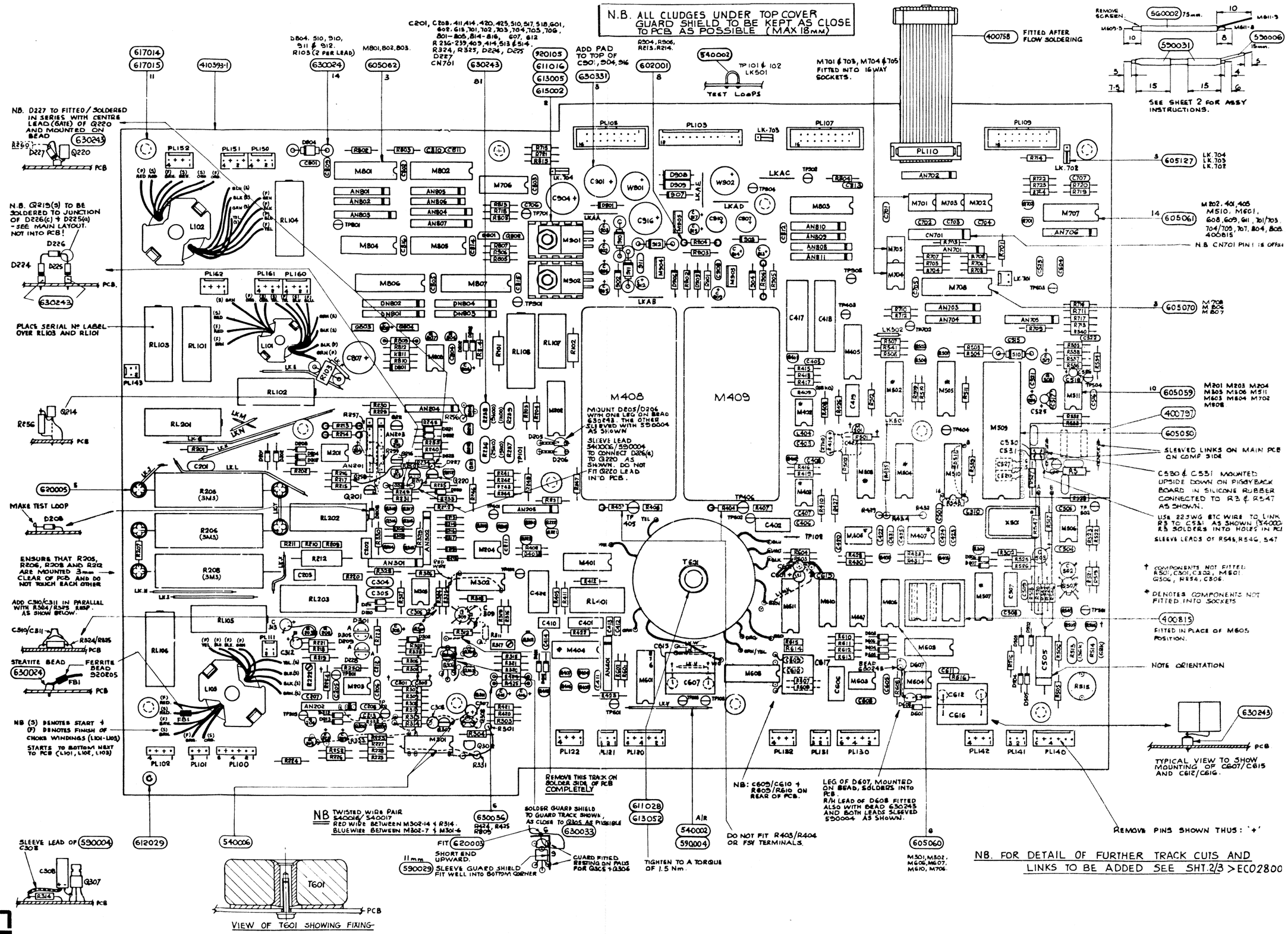

1281

datron WAVETEK

© Datron Instruments 1989

D.C. ASSEMBLY

Drawing No. 480738 Sheet 1

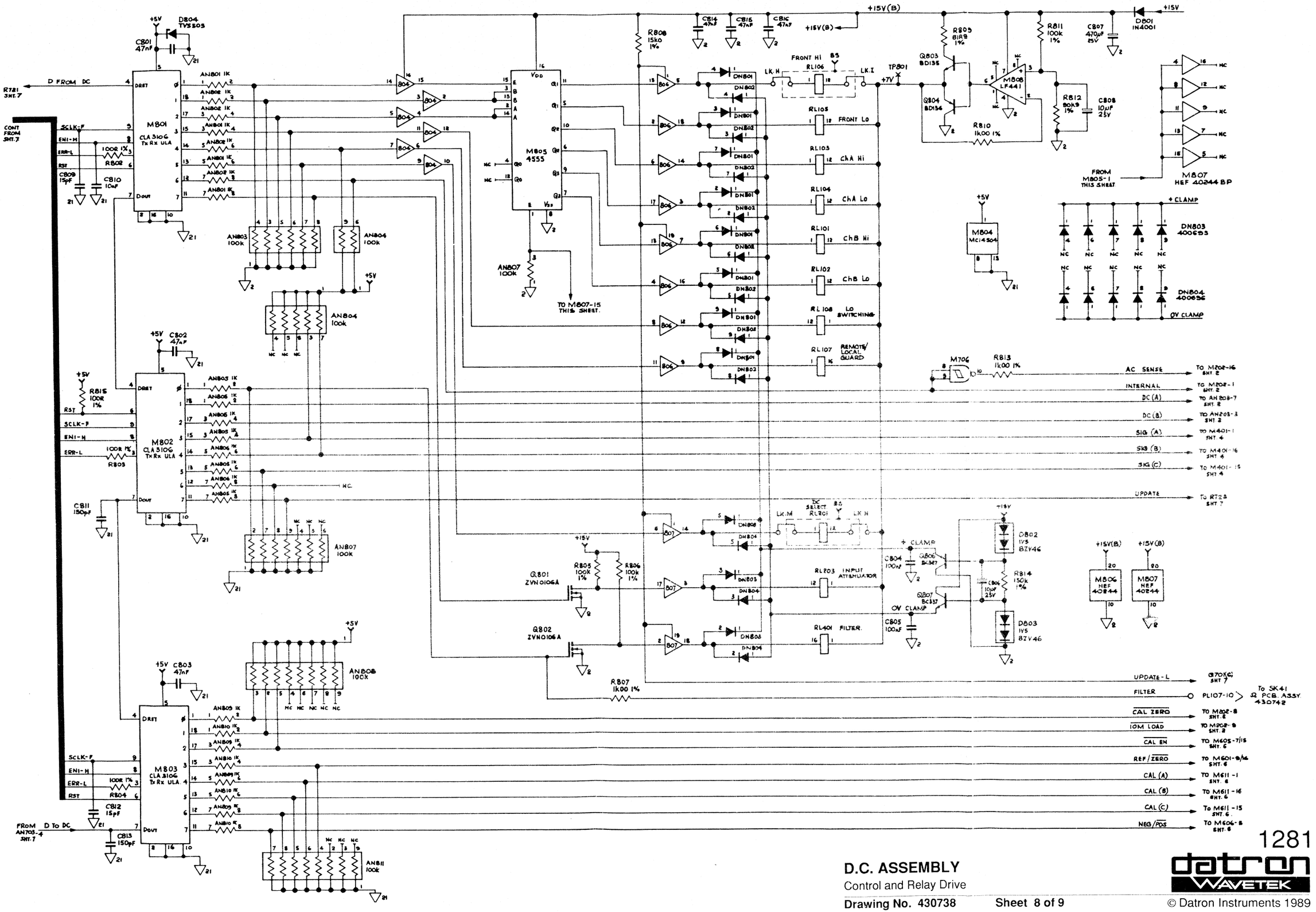

1281

D.C. ASSEMBLY

Control and Relay Drive

Drawing No. 430738 **Sheet 8 of 9**

© Datron Instruments 1989

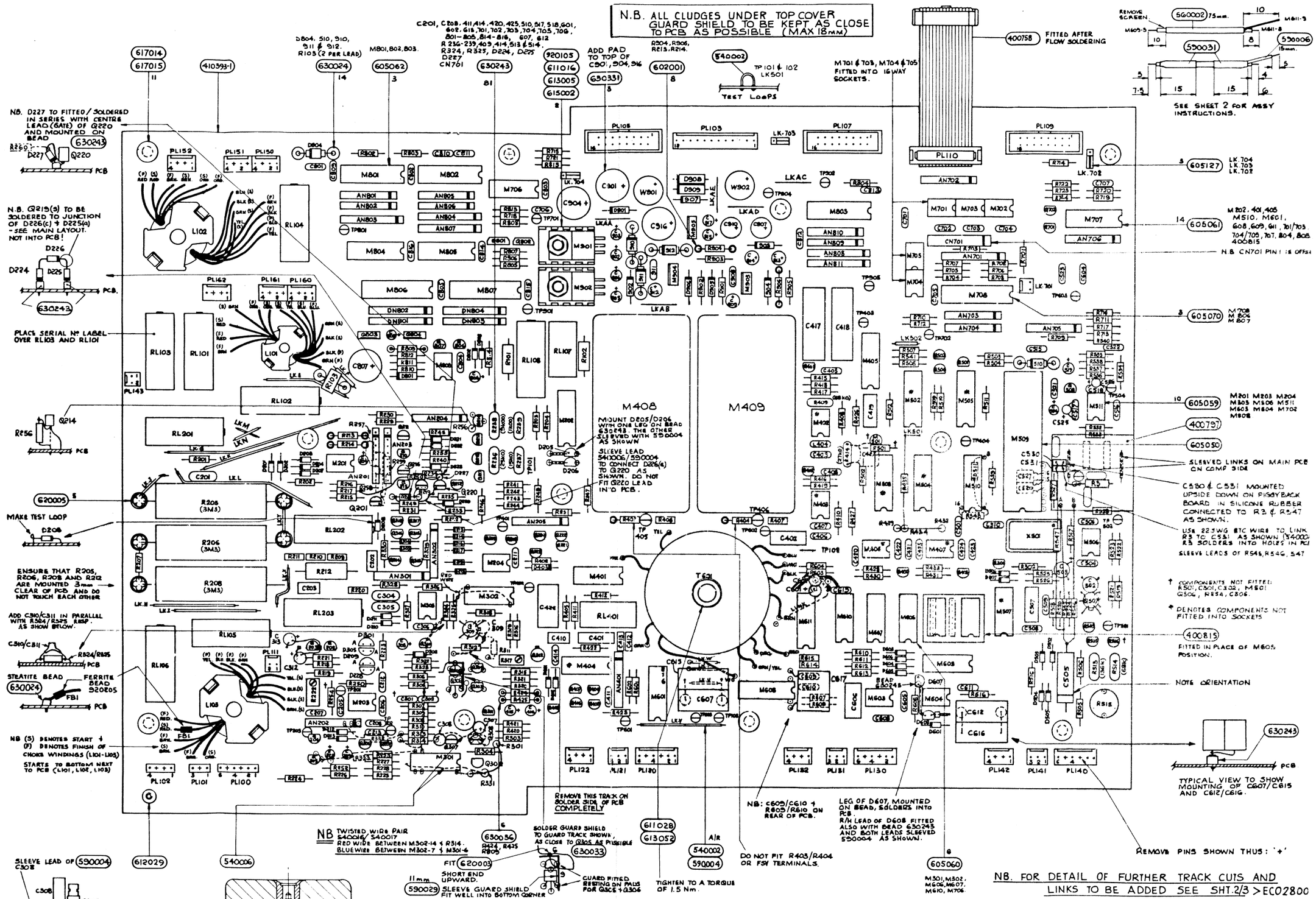

1281

datron WAVETEK

© Datron Instruments 1989

D.C. ASSEMBLY

Drawing No. 480738 Sheet 1

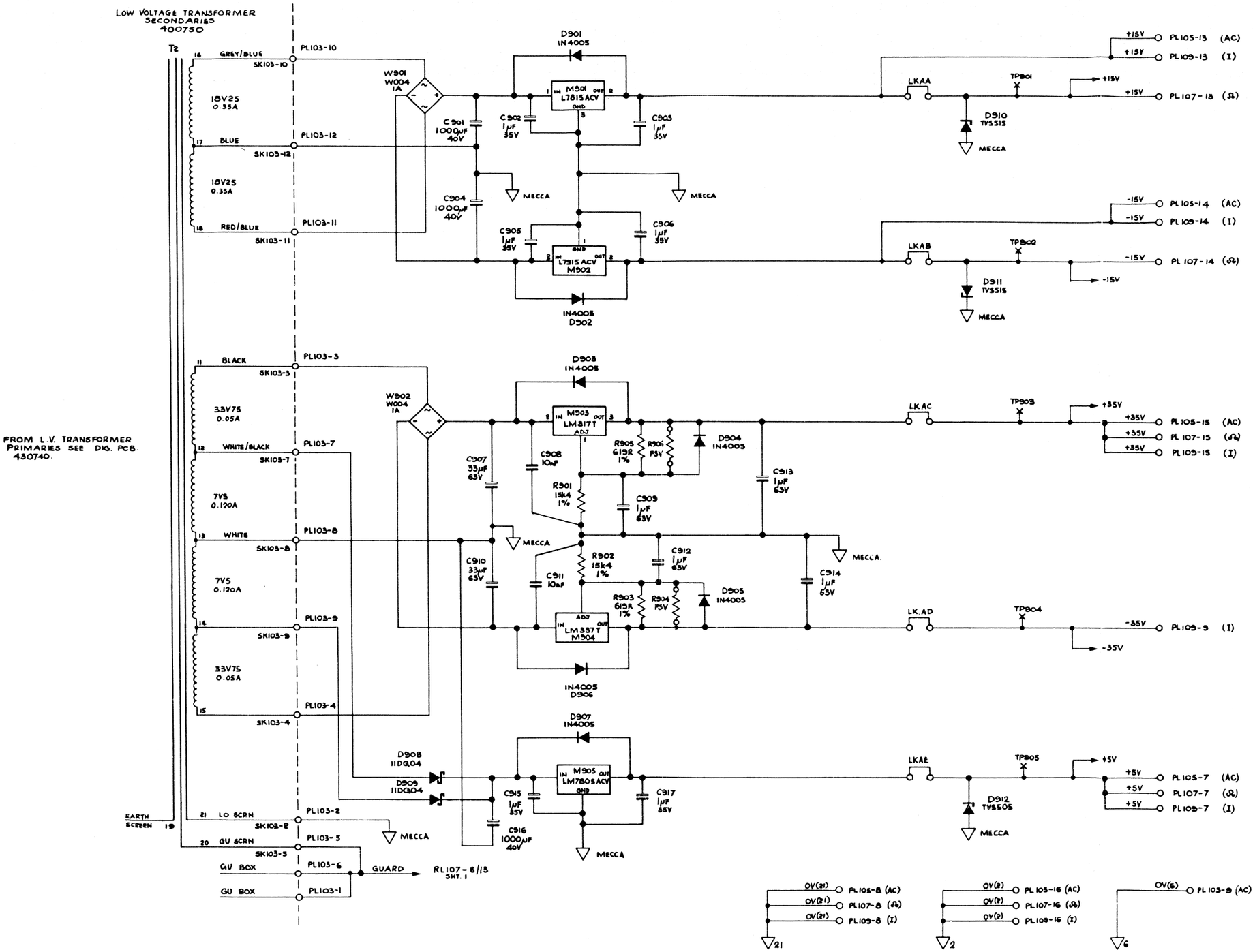

1281

D.C. ASSEMBLY

In - Guard Power Supplies

Drawing No. 430738 **Sheet 9 of 9**

datron WAVETEK

© Datron Instruments 1989

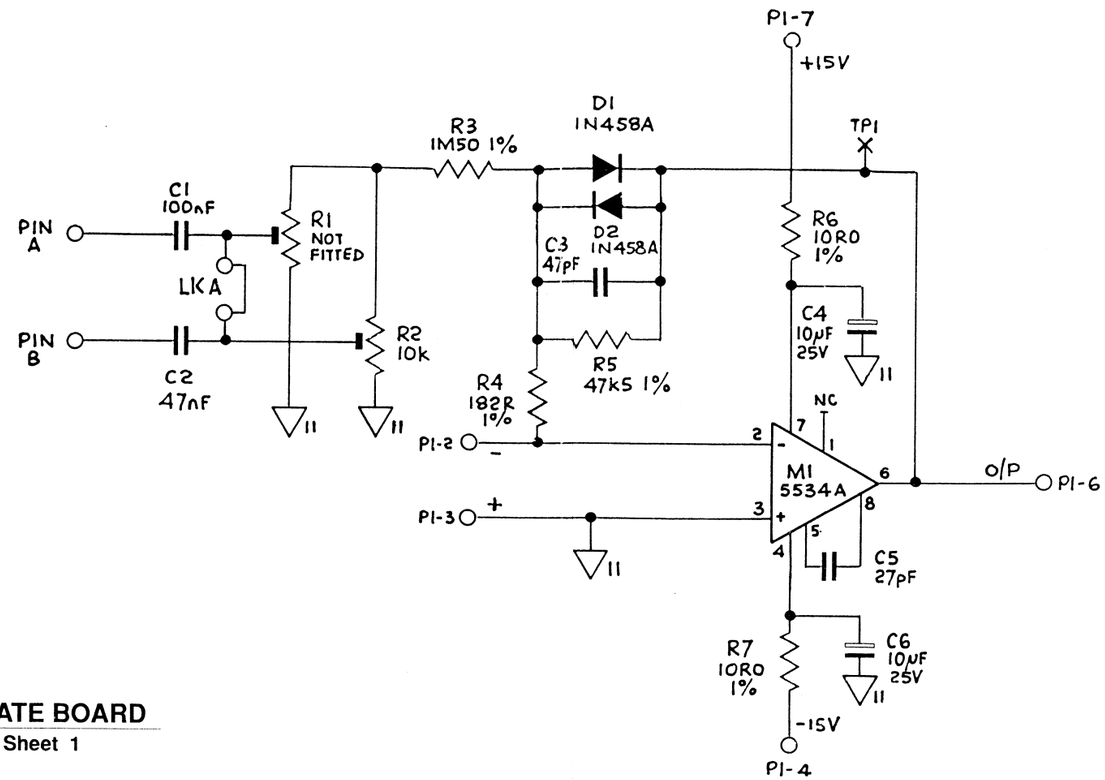

D.C. ASSEMBLY : READ RATE BOARD

Drawing No. 430797 Sheet 1

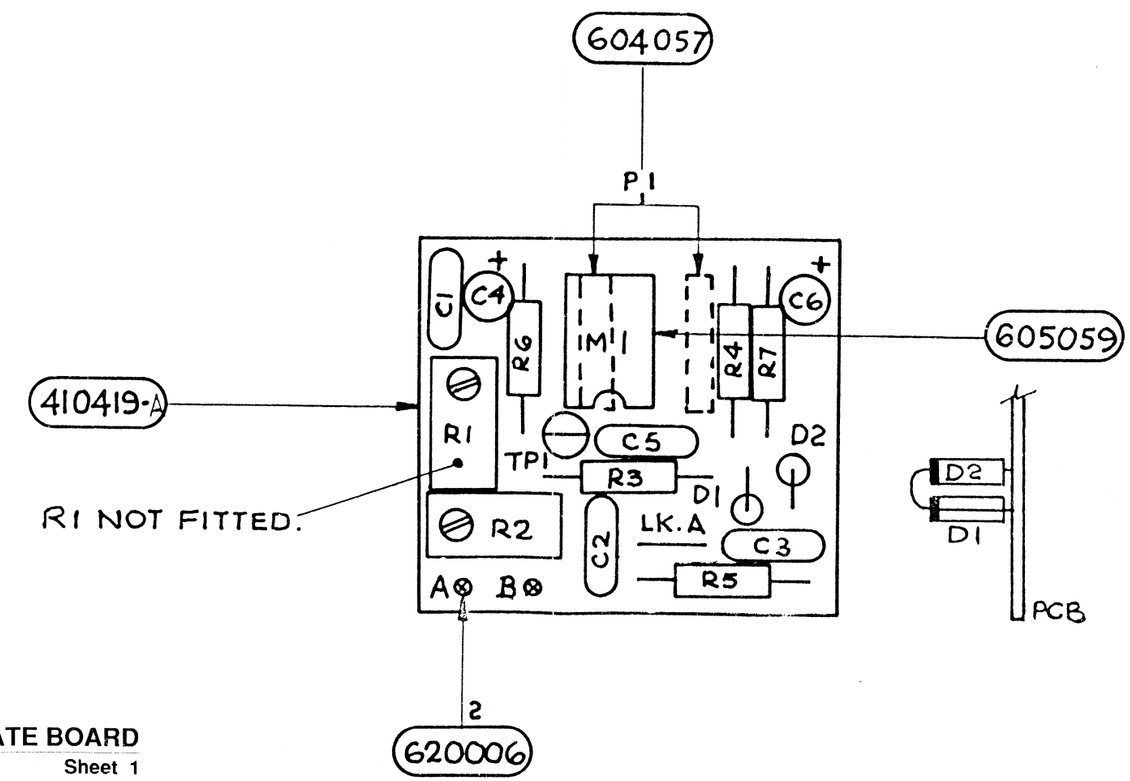

1281

datron WAVETEK

© Datron Instruments 1989

D.C. ASSEMBLY : READ RATE BOARD

Drawing No. 480797 Sheet 1

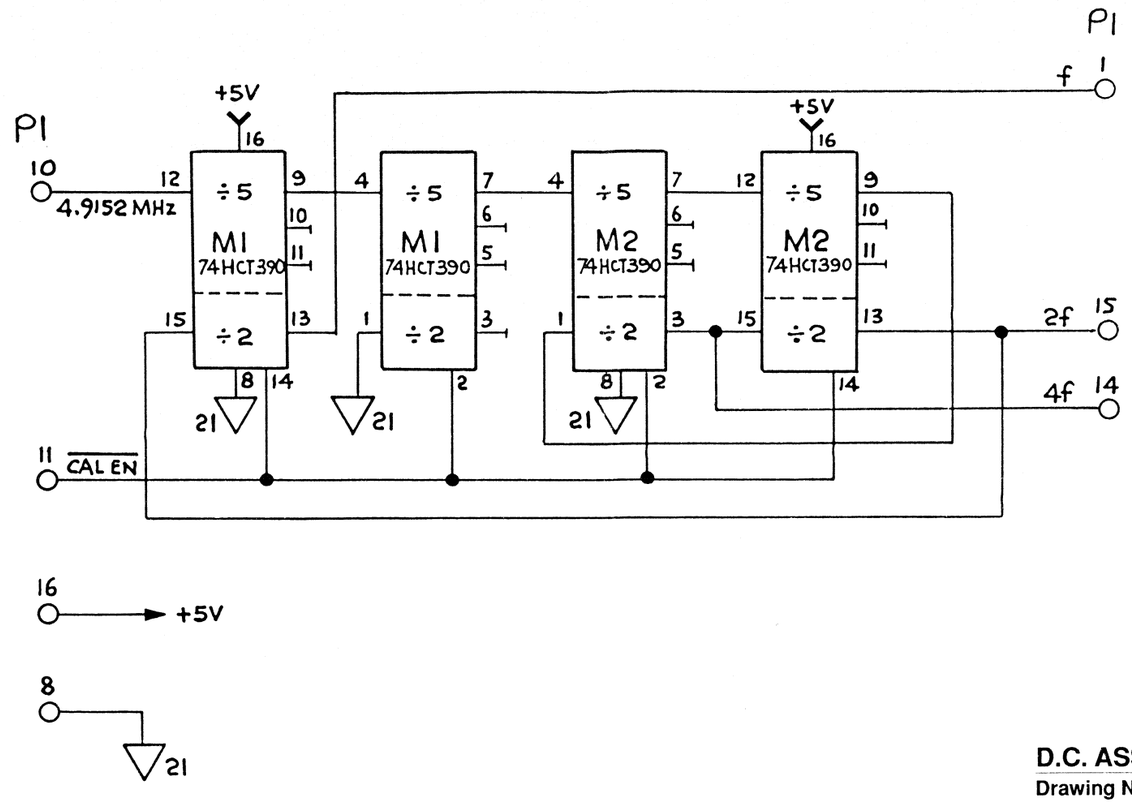

D.C. ASSEMBLY : CLOCK BOARD

Drawing No. 430815 Sheet 1

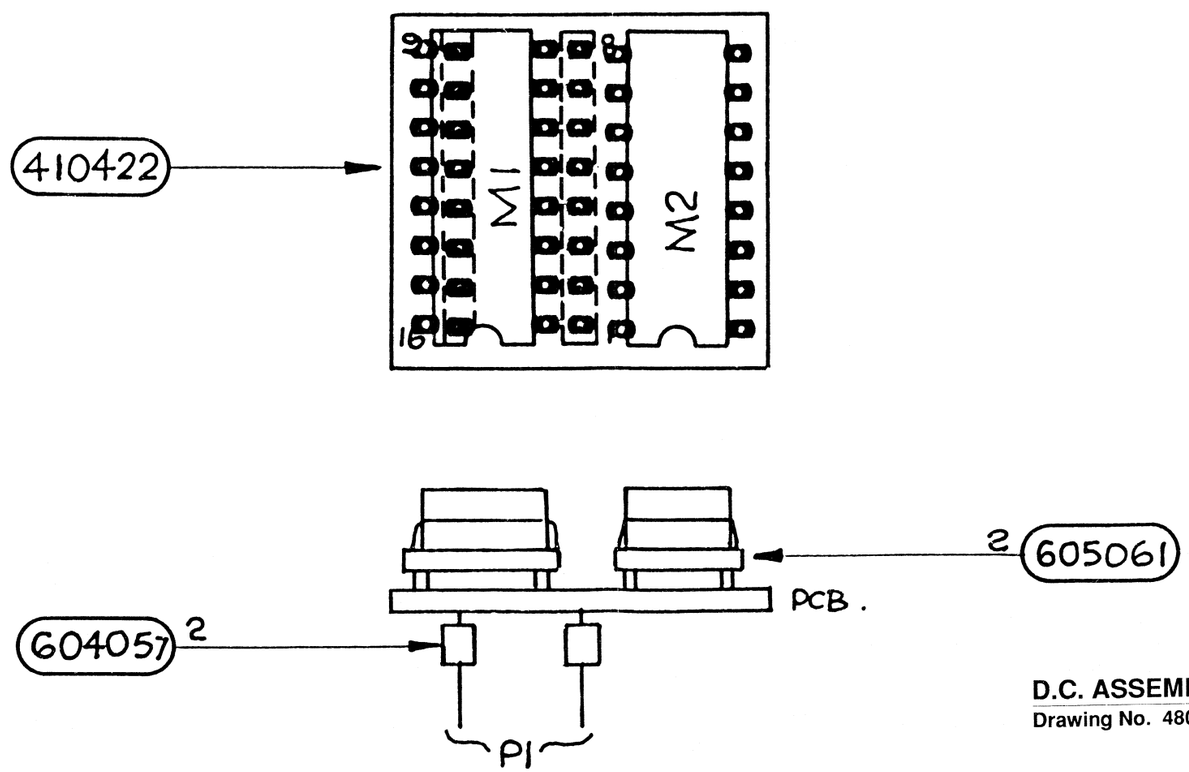

D.C. ASSEMBLY : CLOCK BOARD

Drawing No. 480815 Sheet 1

1281

datron WAVETEK

© Datron Instruments 1989

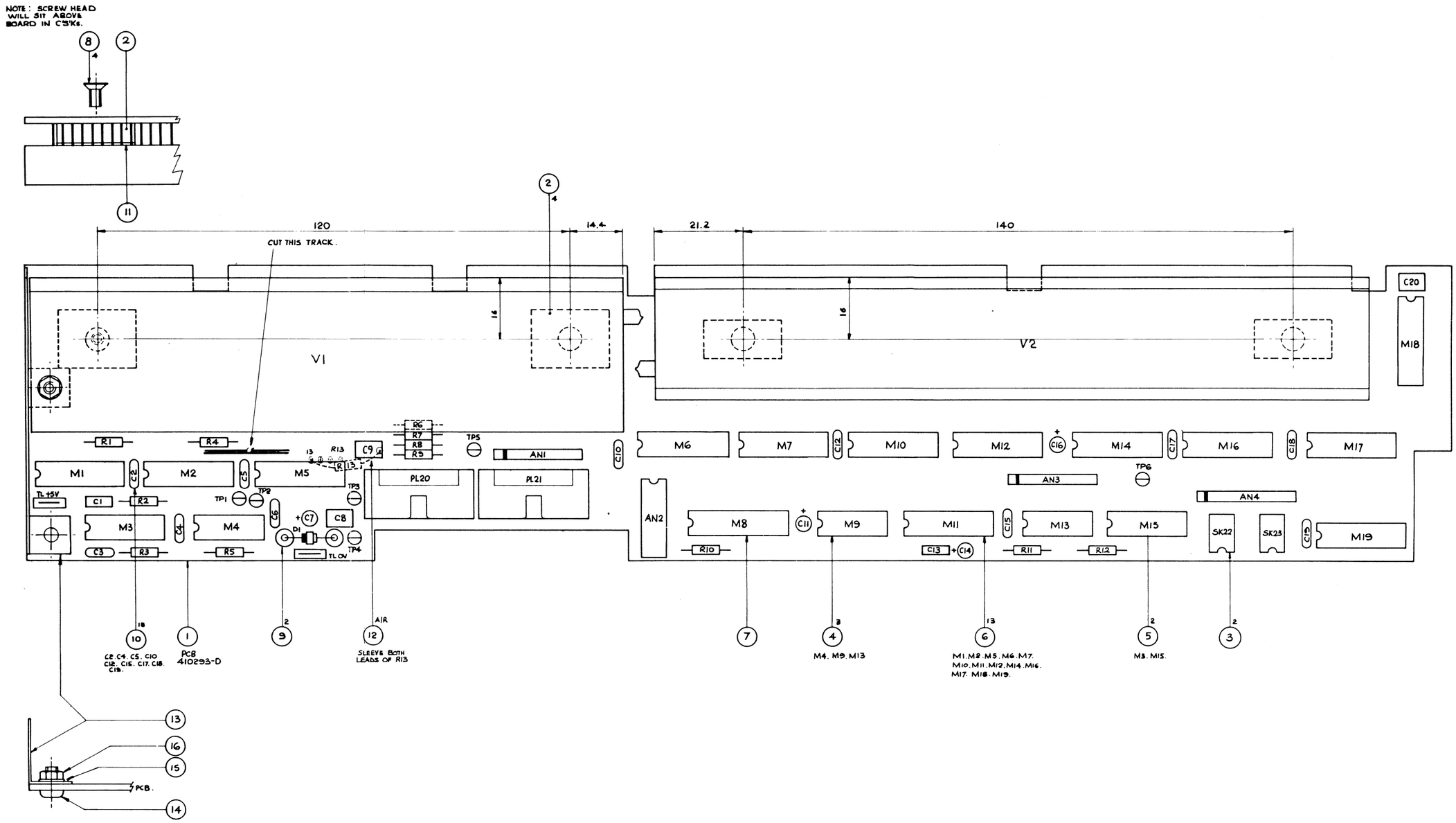

1281

datron WAVETEK

© Datron Instruments 1989

DISPLAY ASSEMBLY

Drawing No. 480739 **Sheet 1**

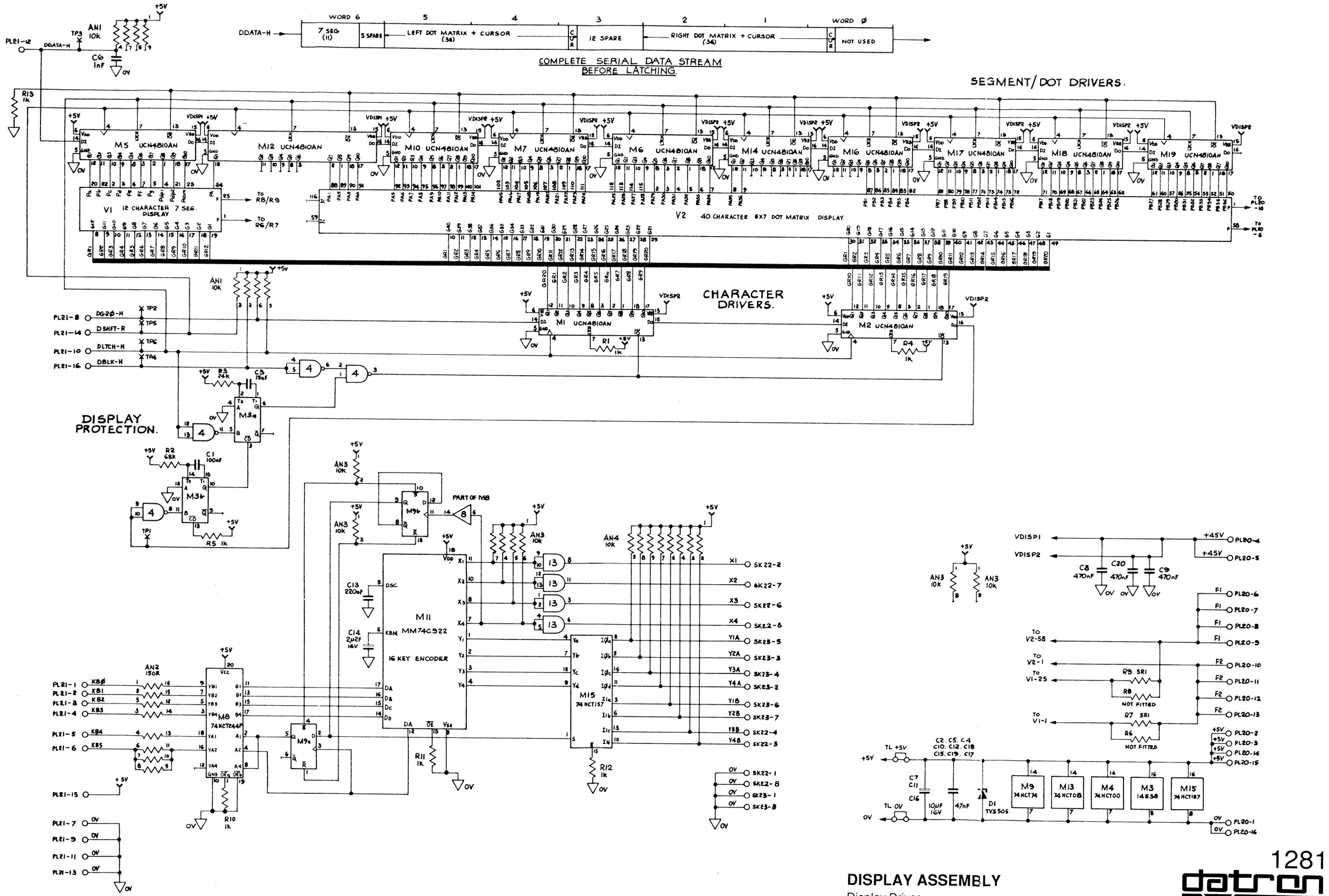

DISPLAY ASSEMBLY

Display Driver

Drawing No. 430739 **Sheet 1 of 1**

1281

datron WAVETEK

© Datron Instruments 1989

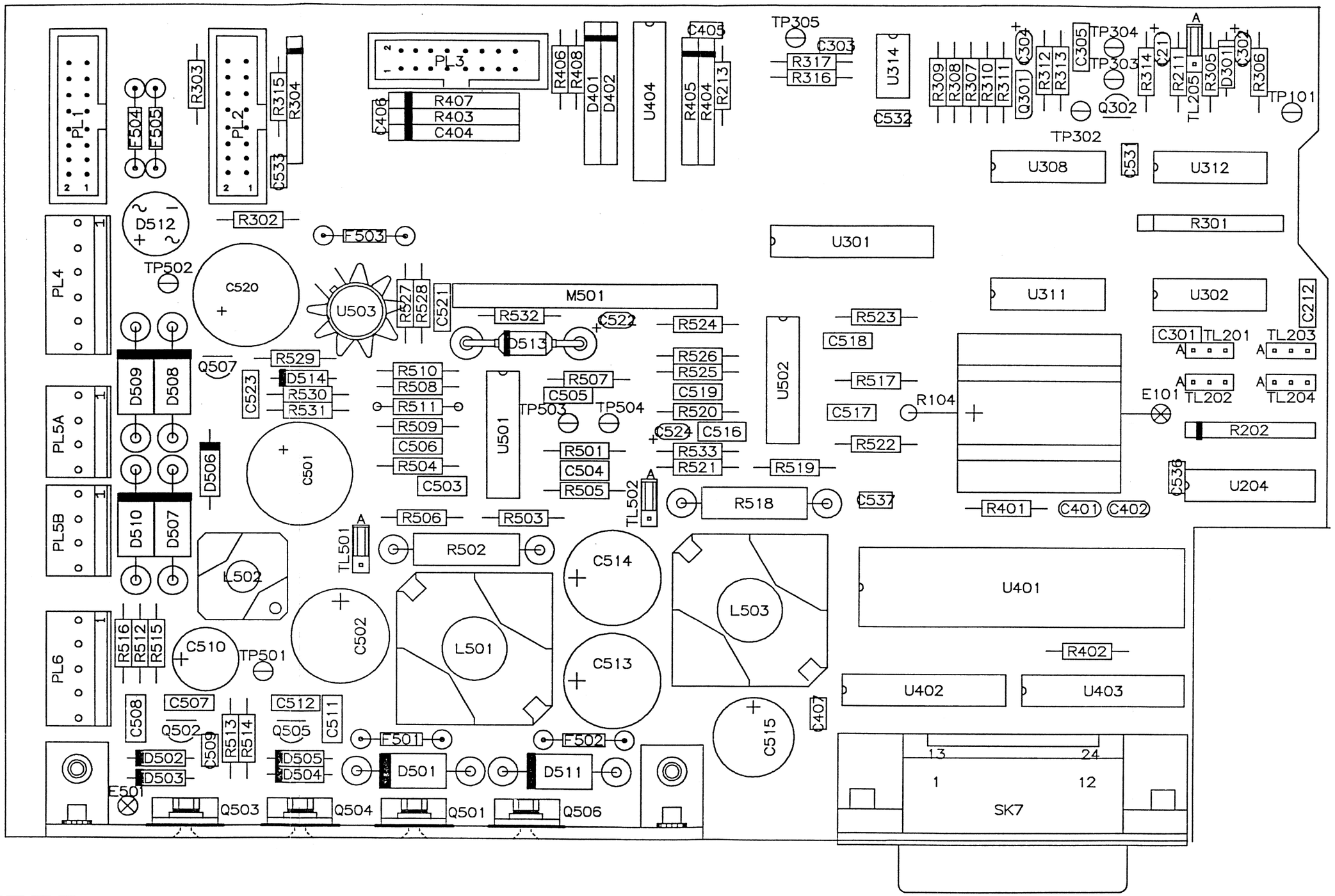

1281

datron WAVETEK

© Datron Instruments 1989

DIGITAL ASSEMBLY (left-hand - expanded)

Drawing No. DA400901 **Sheet 2 of 3**

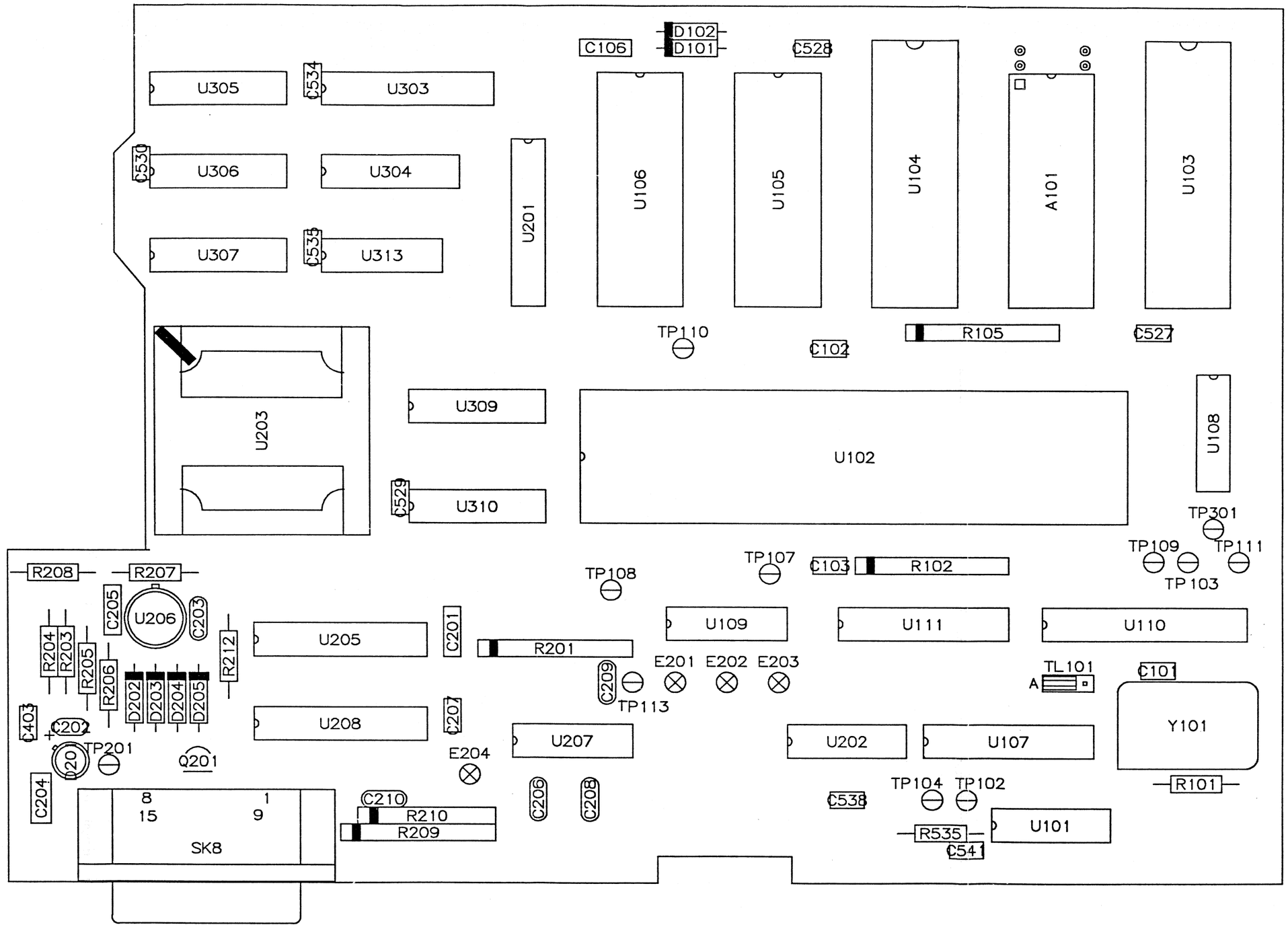

1281

datron WAVETEK

DIGITAL ASSEMBLY (right-hand - expanded)

Drawing No. DA400901 **Sheet 3 of 3**

© Datron Instruments 1989

MOUNTING I C'S			
No OF PINS	PART No	No OFF	WHERE USED
8	605059	1	U314
14	605060	10	U101 , U106 , U109 , U202 , U207 , U302 , U306 , U311 , U312 , U313 .
16	605061	9	U204 , U304 , U305 , U306 , U307 , U309 , U310 , U501 , U502 .
20	605070	10	U107 , U111 , U201 , U205 , U208 , U301 , U303 , U402 . U403 , U404 .
24	605064	1	U110 .
28	605065	3	A101 , U105 , U106 .
32	605199	2	U103 , U104 .
40	605050	1	U401 .
64	605117	1	U102 .
68	605151	1	U203 .

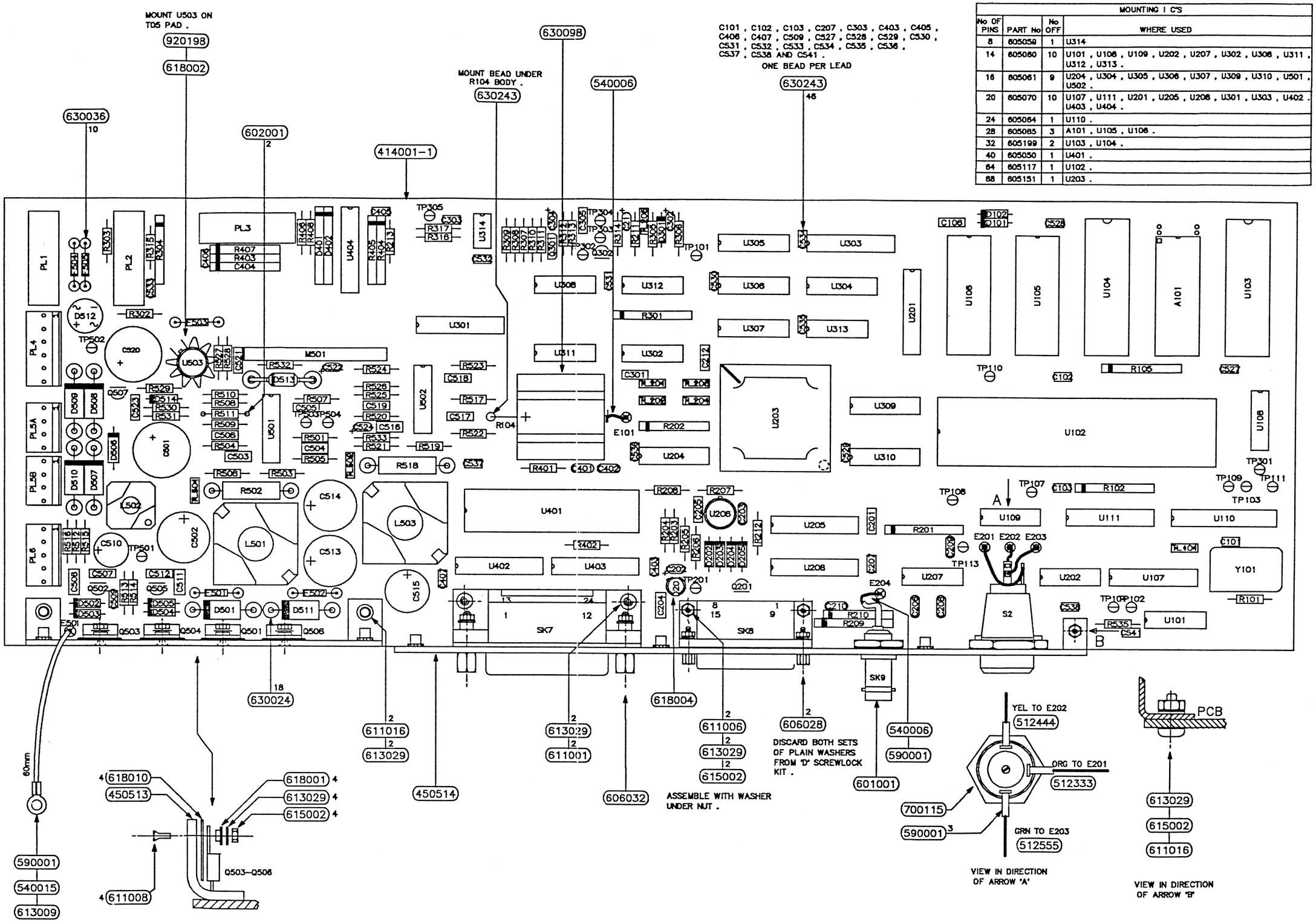

1281

datron WAVETEK

© Datron Instruments 1989

DIGITAL ASSEMBLY

Drawing No. DA400901 **Sheet 1of 3**

N.B. expanded versions are on Sheets 2 and 3 (page 11.4-1)

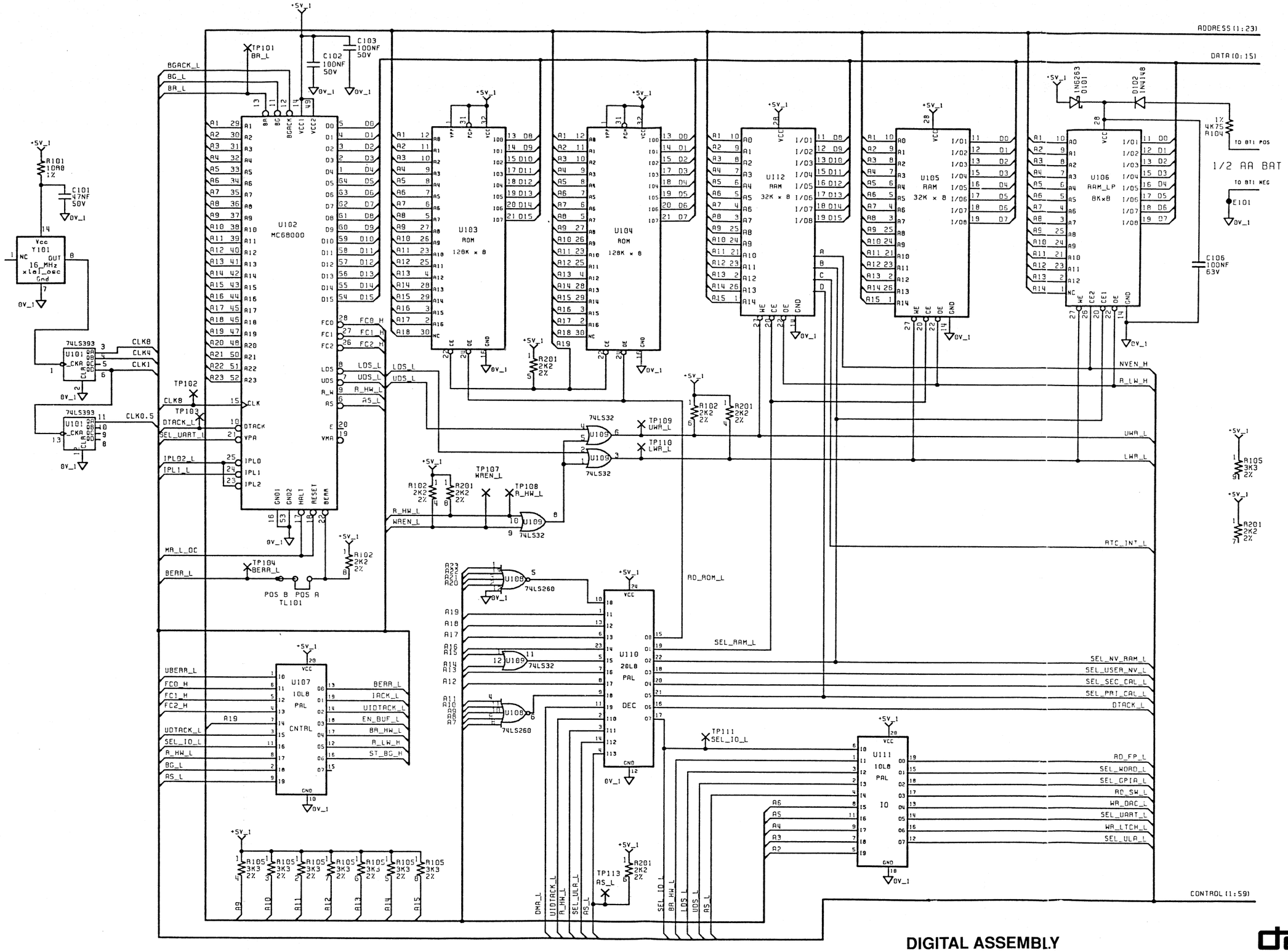

DIGITAL ASSEMBLY

Processor, Address Decoding and Memory

Drawing No. DC400901 **Sheet 1 of 5**

1281

datron WAVETEK

© Datron Instruments 1989

MOUNTING I C'S			
No OF PINS	PART No	No OFF	WHERE USED
8	605058	1	U314
14	605060	10	U101 , U108 , U109 , U202 , U207 , U302 , U308 , U311 , U312 , U313 .
16	605061	9	U204 , U304 , U305 , U306 , U307 , U309 , U310 , U501 , U502 .
20	605070	10	U107 , U111 , U201 , U205 , U208 , U301 , U303 , U402 . U403 , U404 .
24	605064	1	U110 .
28	605065	3	A101 , U105 , U106 .
32	605199	2	U103 , U104 .
40	605050	1	U401 .
64	605117	1	U102 .
88	605151	1	U203 .

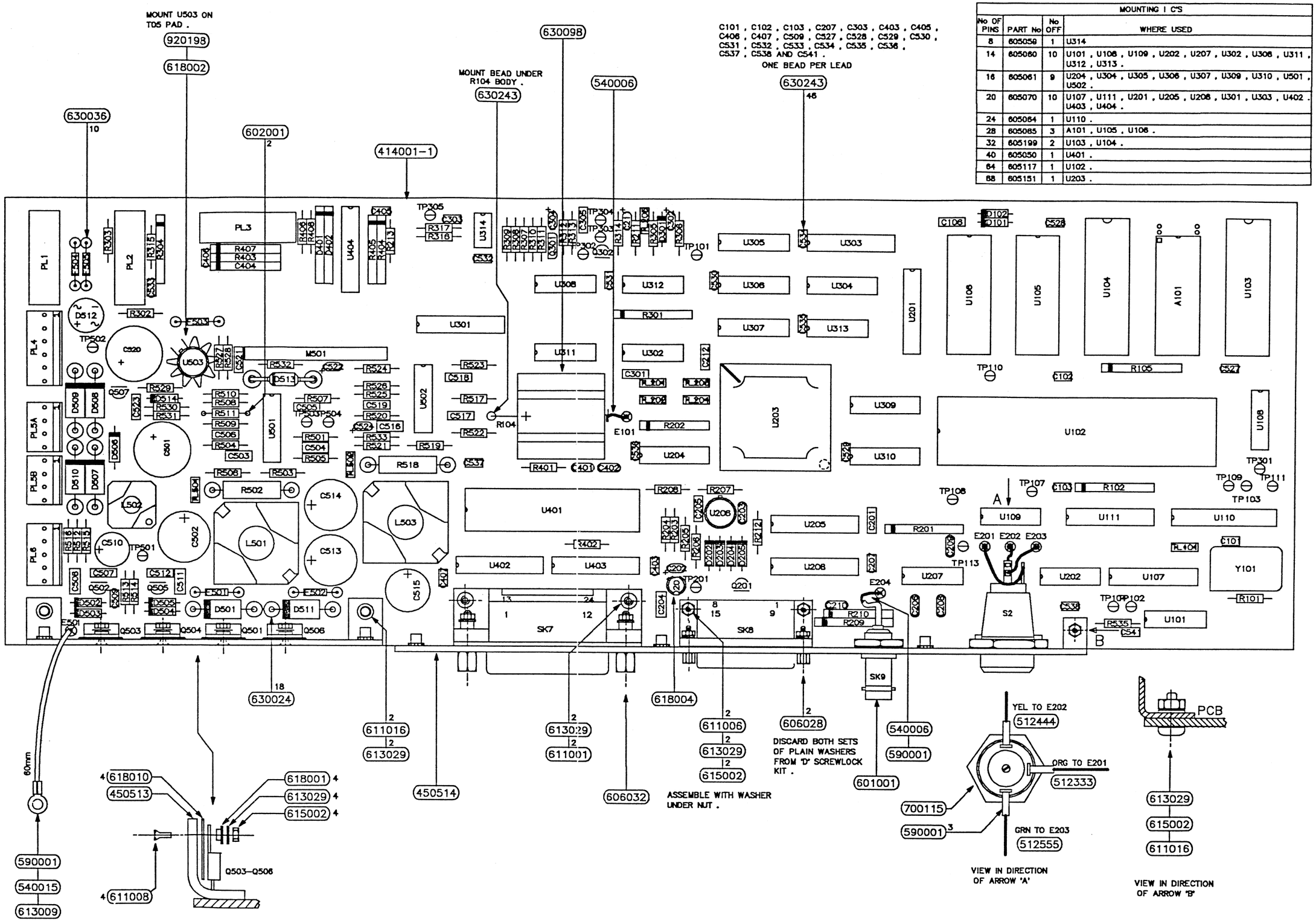

1281

datron WAVETEK

© Datron Instruments 1989

DIGITAL ASSEMBLY

Drawing No. DA400901 Sheet 1of 3

N.B. expanded versions are on Sheets 2 and 3 (page 11.4-1)

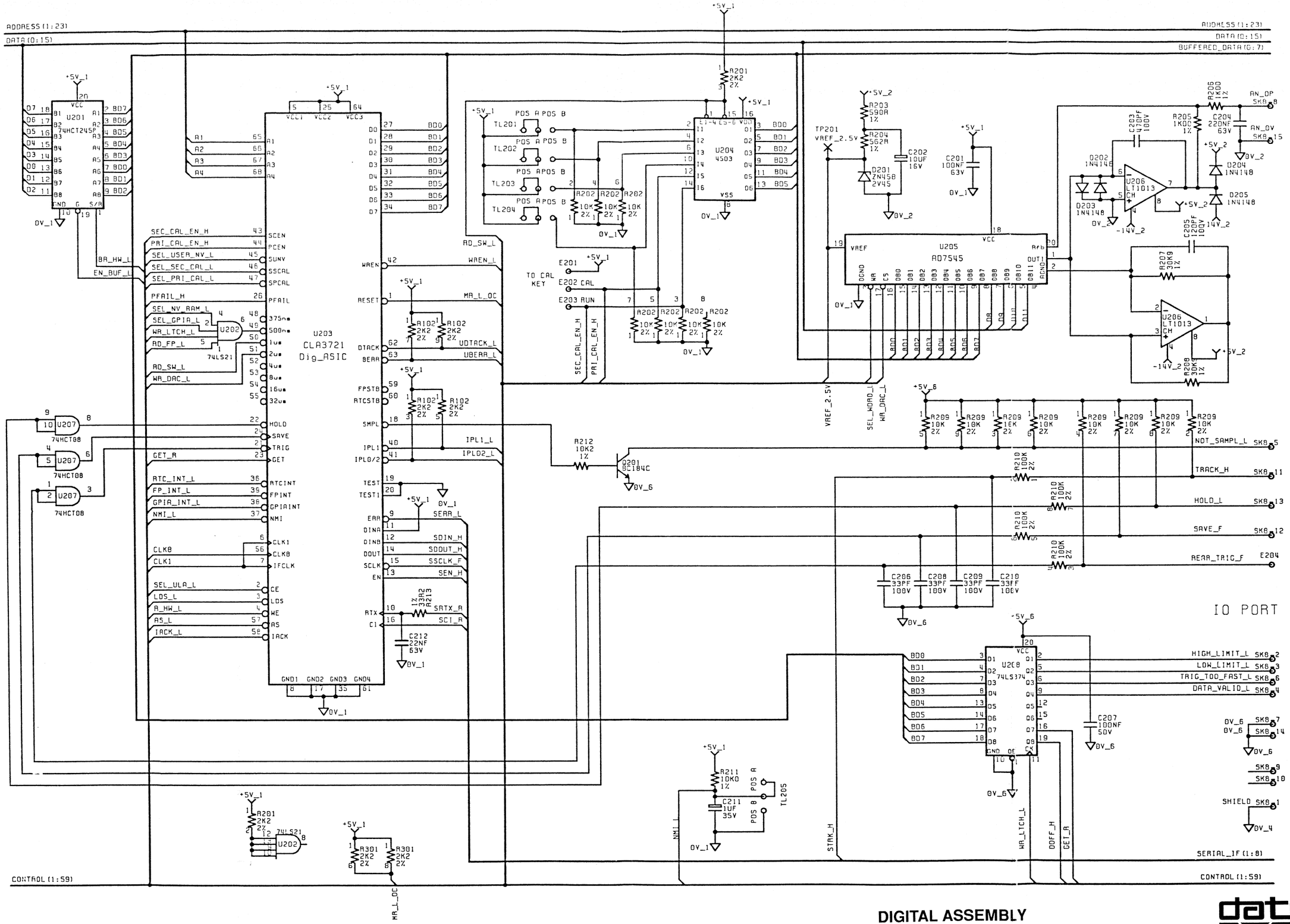

DIGITAL ASSEMBLY

ASIC and I/O

Drawing No. DC400901 **Sheet 2 of 5**

1281

datron WAVETEK

© Datron Instruments 1989

MOUNTING I C'S			
No OF PINS	PART No	No OFF	WHERE USED
8	605059	1	U314
14	605060	10	U101 , U108 , U109 , U202 , U207 , U302 , U308 , U311 , U312 , U313 .
16	605061	9	U204 , U304 , U305 , U306 , U307 , U309 , U310 , U501 , U502 .
20	605070	10	U107 , U111 , U201 , U205 , U208 , U301 , U303 , U402 . U403 , U404 .
24	605064	1	U110 .
28	605065	3	A101 , U105 , U106 .
32	605199	2	U103 , U104 .
40	605050	1	U401 .
64	605117	1	U102 .
68	605151	1	U203 .

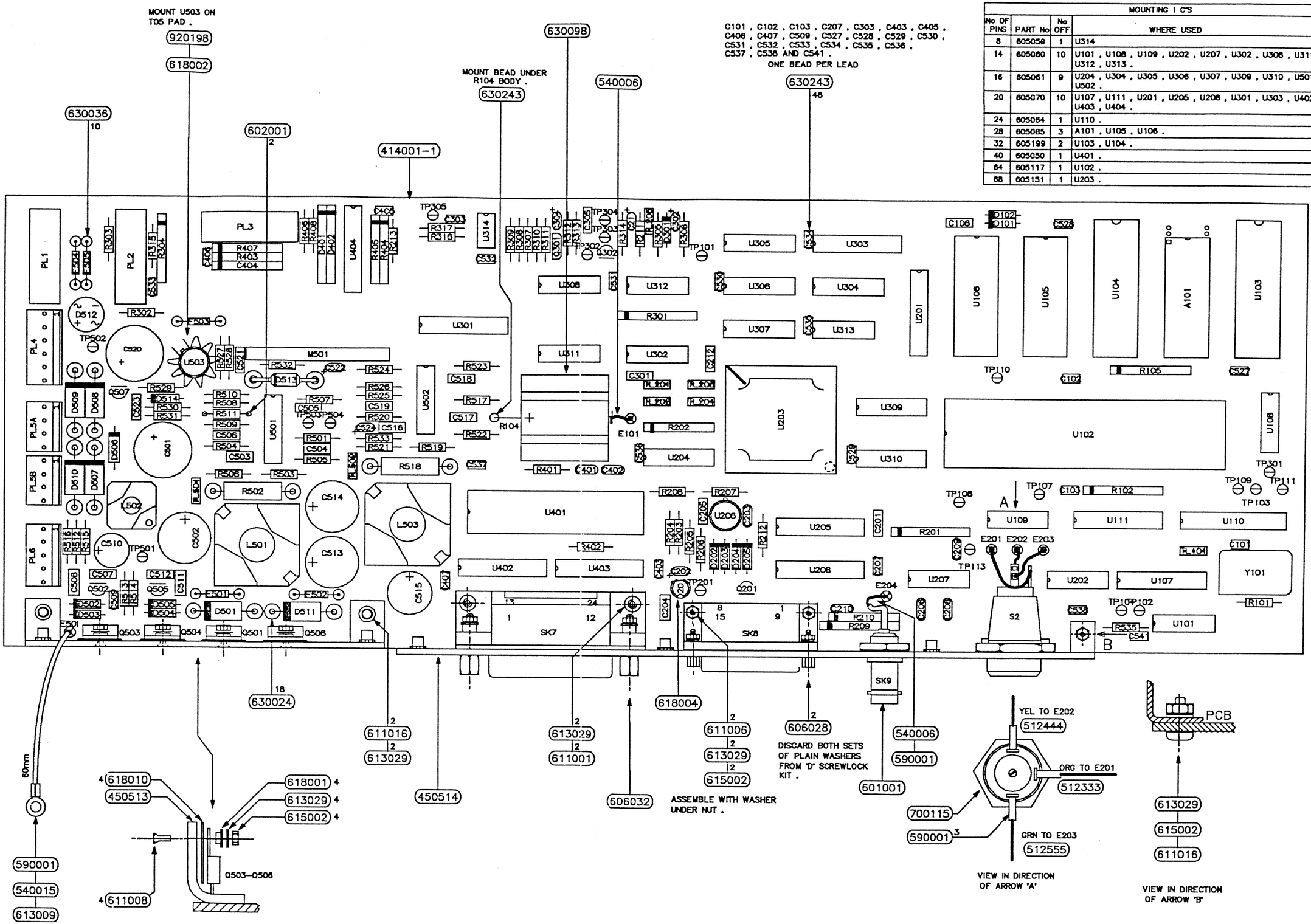

1281

datron WAVETEK

© Datron Instruments 1989

DIGITAL ASSEMBLY

Drawing No. DA400901 Sheet 1of 3

N.B. expanded versions are on Sheets 2 and 3 (page 11.4-1)

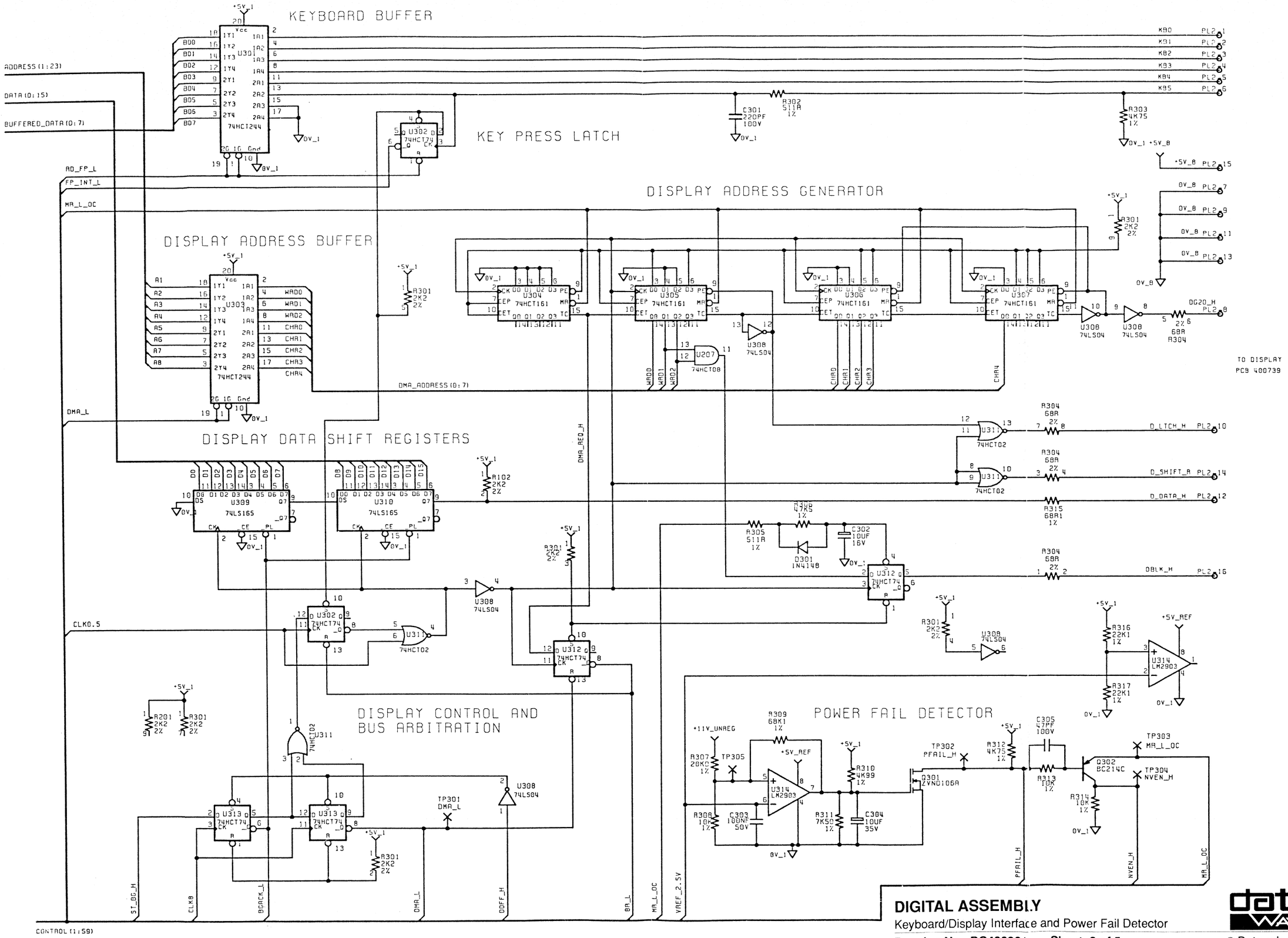

DIGITAL ASSEMBLY

Keyboard/Display Interface and Power Fail Detector

Drawing No. DC400901 **Sheet 3 of 5**

1281

datron WAVETEK

© Datron Instruments 1989

MOUNTING I C'S			
No OF PINS	PART No	No OFF	WHERE USED
8	605059	1	U314
14	605060	10	U101 , U106 , U109 , U202 , U207 , U302 , U306 , U311 , U312 , U313 .
16	605061	9	U204 , U304 , U305 , U306 , U307 , U309 , U310 , U501 , U502 .
20	605070	10	U107 , U111 , U201 , U205 , U208 , U301 , U303 , U402 . U403 , U404 .
24	605064	1	U110 .
28	605085	3	A101 , U105 , U106 .
32	605199	2	U103 , U104 .
40	605050	1	U401 .
64	605117	1	U102 .
68	605151	1	U203 .

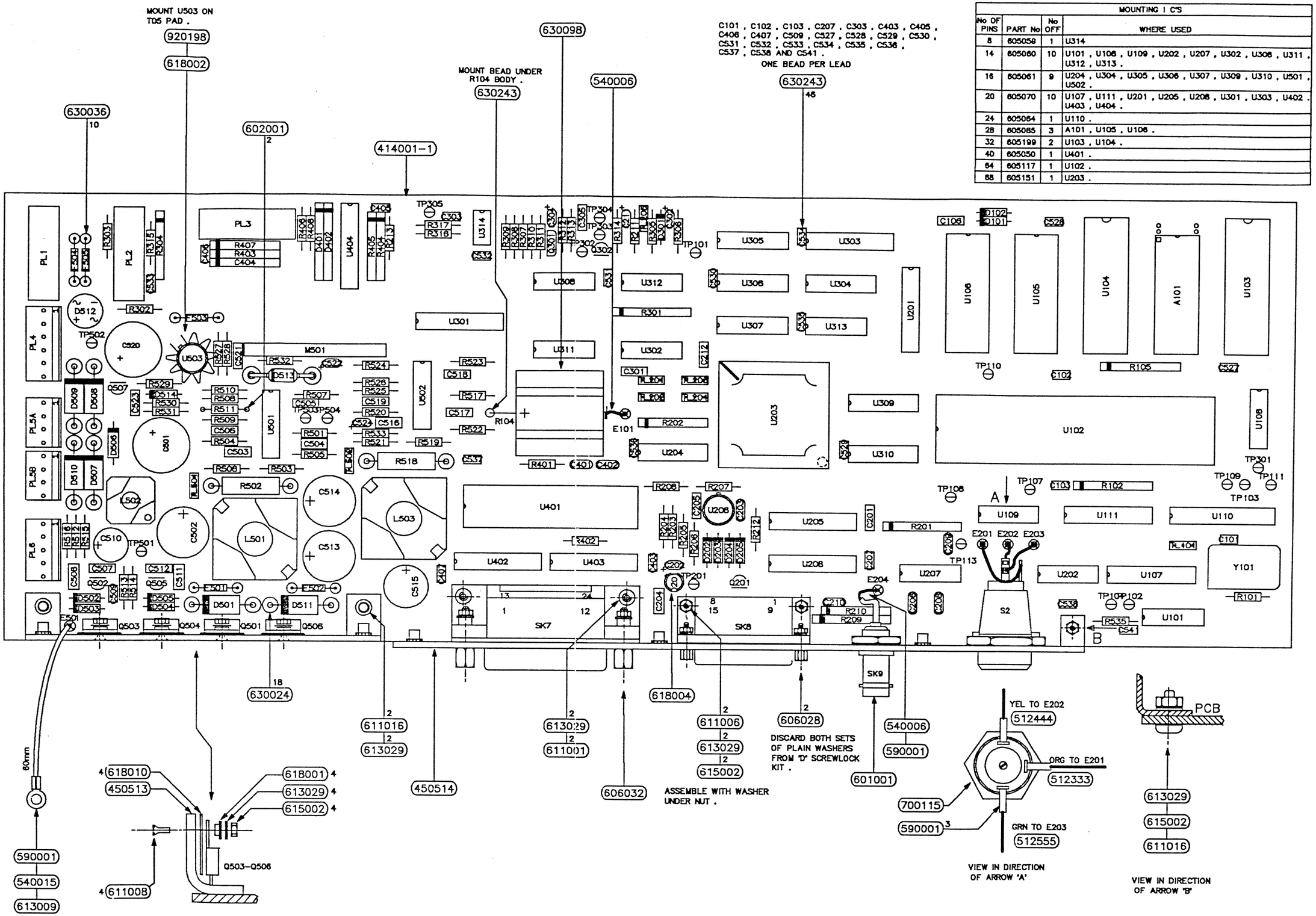

1281

datron WAVETEK

© Datron Instruments 1989

DIGITAL ASSEMBLY

Drawing No. DA400901 Sheet 1of 3

N.B. expanded versions are on Sheets 2 and 3 (page 11.4-1)

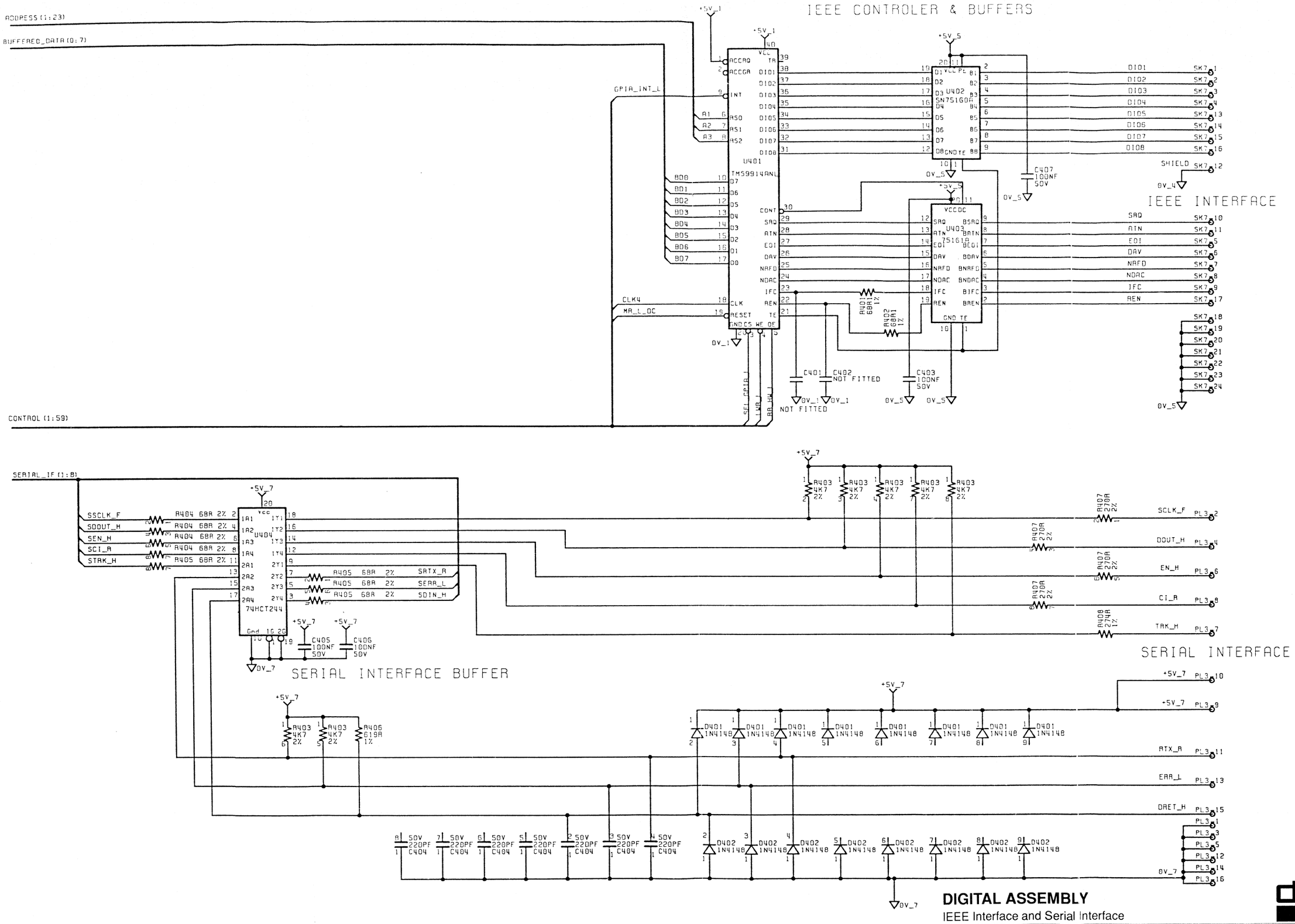

DIGITAL ASSEMBLY

IEEE Interface and Serial Interface

Drawing No. DC400901 **Sheet 4 of 5**

1281

datron WAVETEK

© Datron Instruments 1989

MOUNTING I C'S			
No OF PINS	PART No	No OFF	WHERE USED
8	605059	1	U314
14	605060	10	U101 , U108 , U109 , U202 , U207 , U302 , U306 , U311 , U312 , U313 .
16	605061	9	U204 , U304 , U305 , U306 , U307 , U309 , U310 , U501 , U502 .
20	605070	10	U107 , U111 , U201 , U205 , U208 , U301 , U303 , U402 . U403 , U404 .
24	605064	1	U110 .
28	605085	3	A101 , U105 , U106 .
32	605199	2	U103 , U104 .
40	605050	1	U401 .
64	605117	1	U102 .
88	605151	1	U203 .

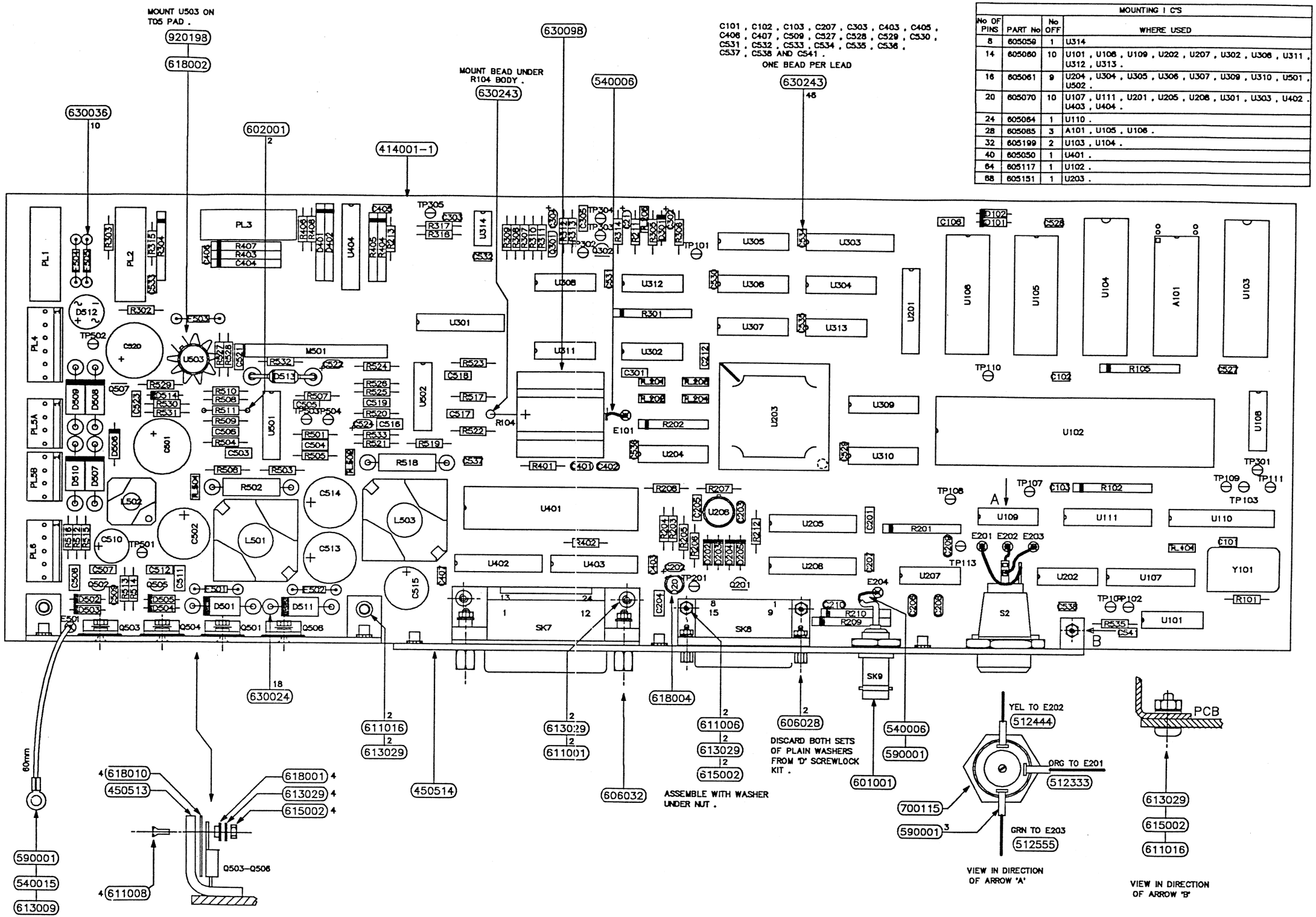

1281

datron WAVETEK

© Datron Instruments 1989

DIGITAL ASSEMBLY

Drawing No. DA400901 Sheet 1of 3

N.B. expanded versions are on Sheets 2 and 3 (page 11.4-1)

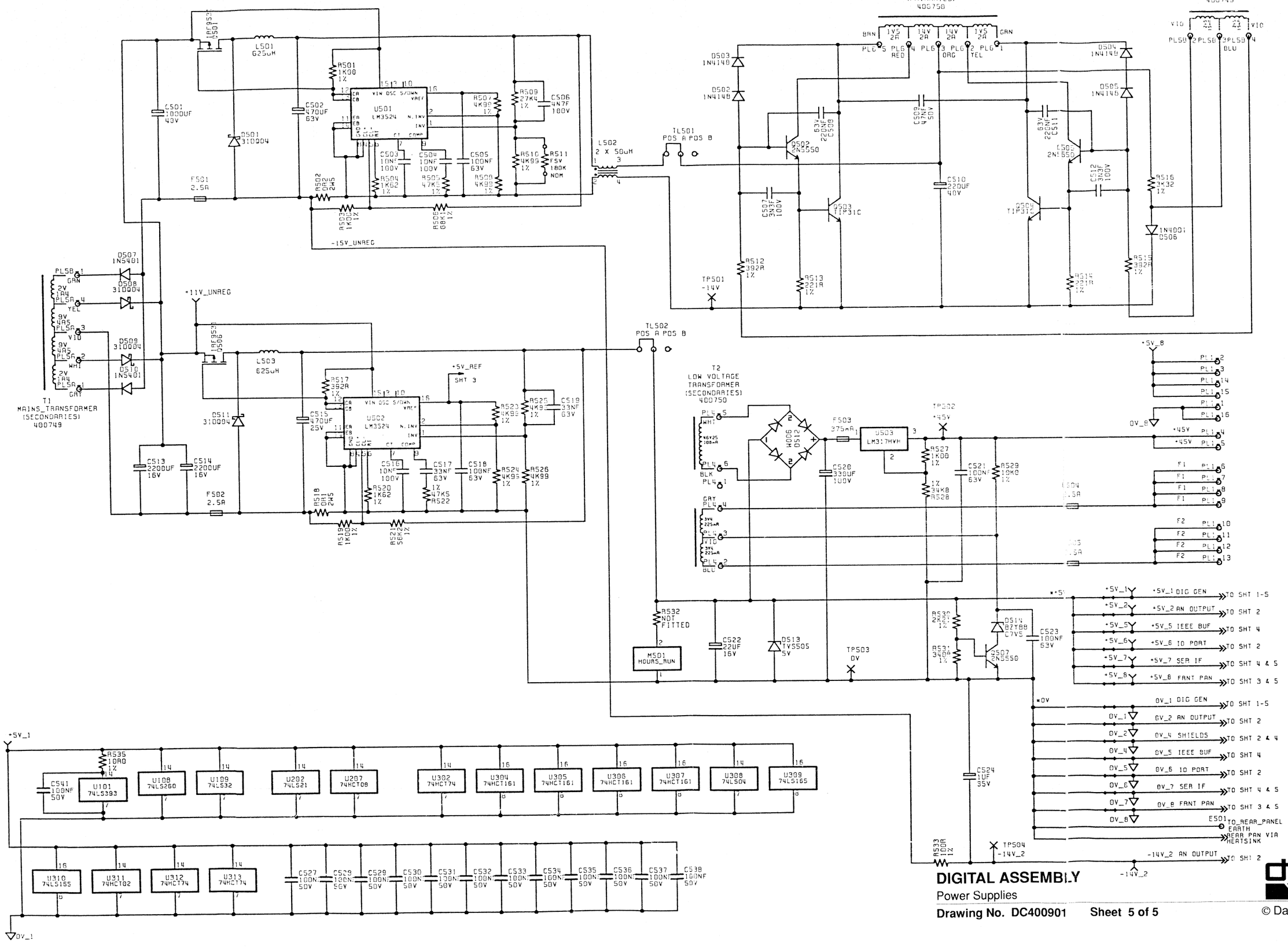

DIGITAL ASSEMBLY

Power Supplies

Drawing No. DC400901 **Sheet 5 of 5**

datron WAVETEK

© Datron Instruments 19

MOUNTING I C'S			
No OF PINS	PART No	No OFF	WHERE USED
8	605058	1	U314
14	605060	10	U101 , U108 , U109 , U202 , U207 , U302 , U308 , U311 , U312 , U313 .
16	605061	9	U204 , U304 , U305 , U306 , U307 , U309 , U310 , U501 , U502 .
20	605070	10	U107 , U111 , U201 , U205 , U208 , U301 , U303 , U402 , U403 , U404 .
24	605064	1	U110 .
28	605065	3	A101 , U105 , U106 .
32	605199	2	U103 , U104 .
40	605050	1	U401 .
64	605117	1	U102 .
88	605151	1	U203 .

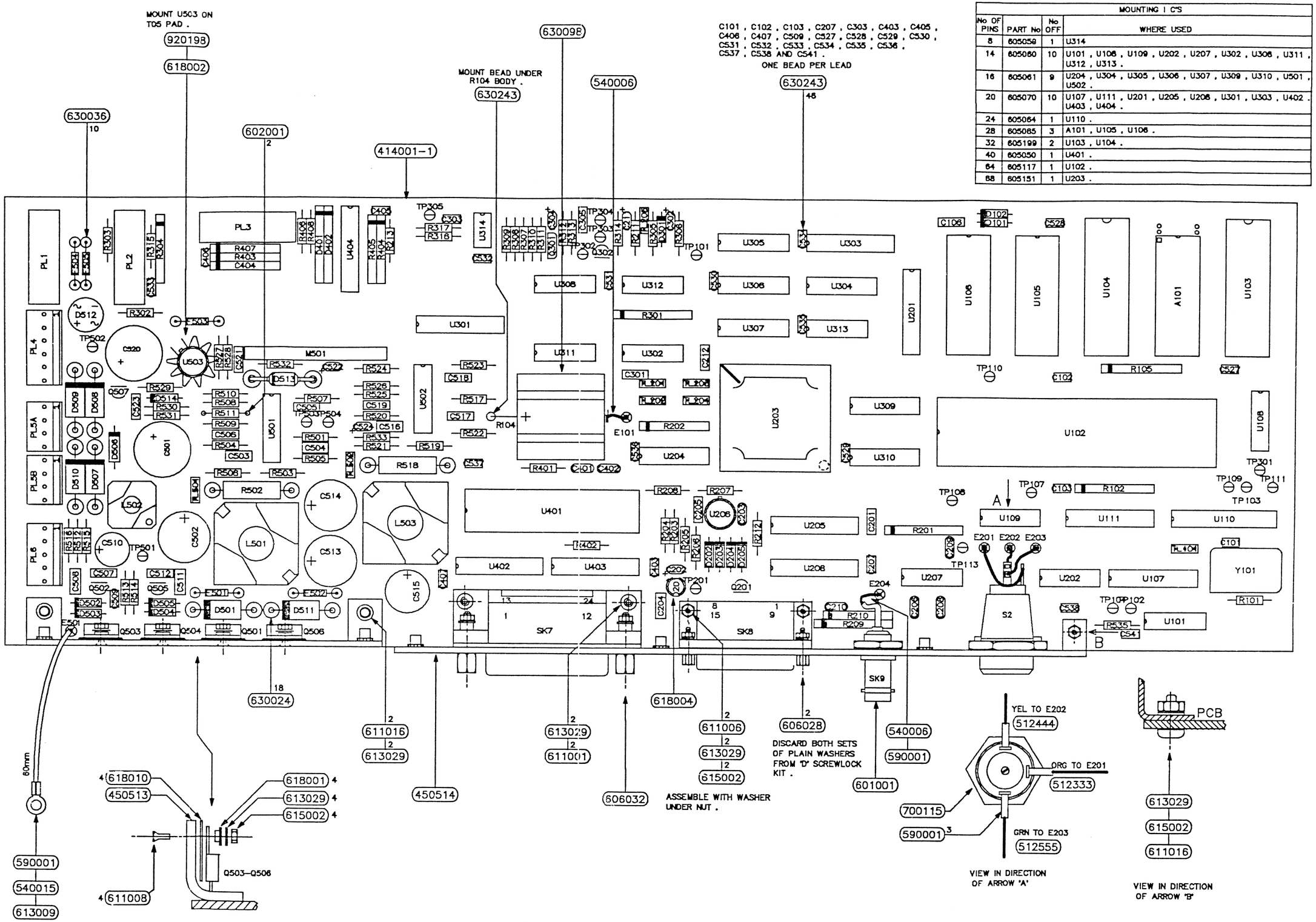

1281

datron WAVETEK

© Datron Instruments 1989

DIGITAL ASSEMBLY

Drawing No. DA400901 Sheet 1of 3

N.B. expanded versions are on Sheets 2 and 3 (page 11.4-1)

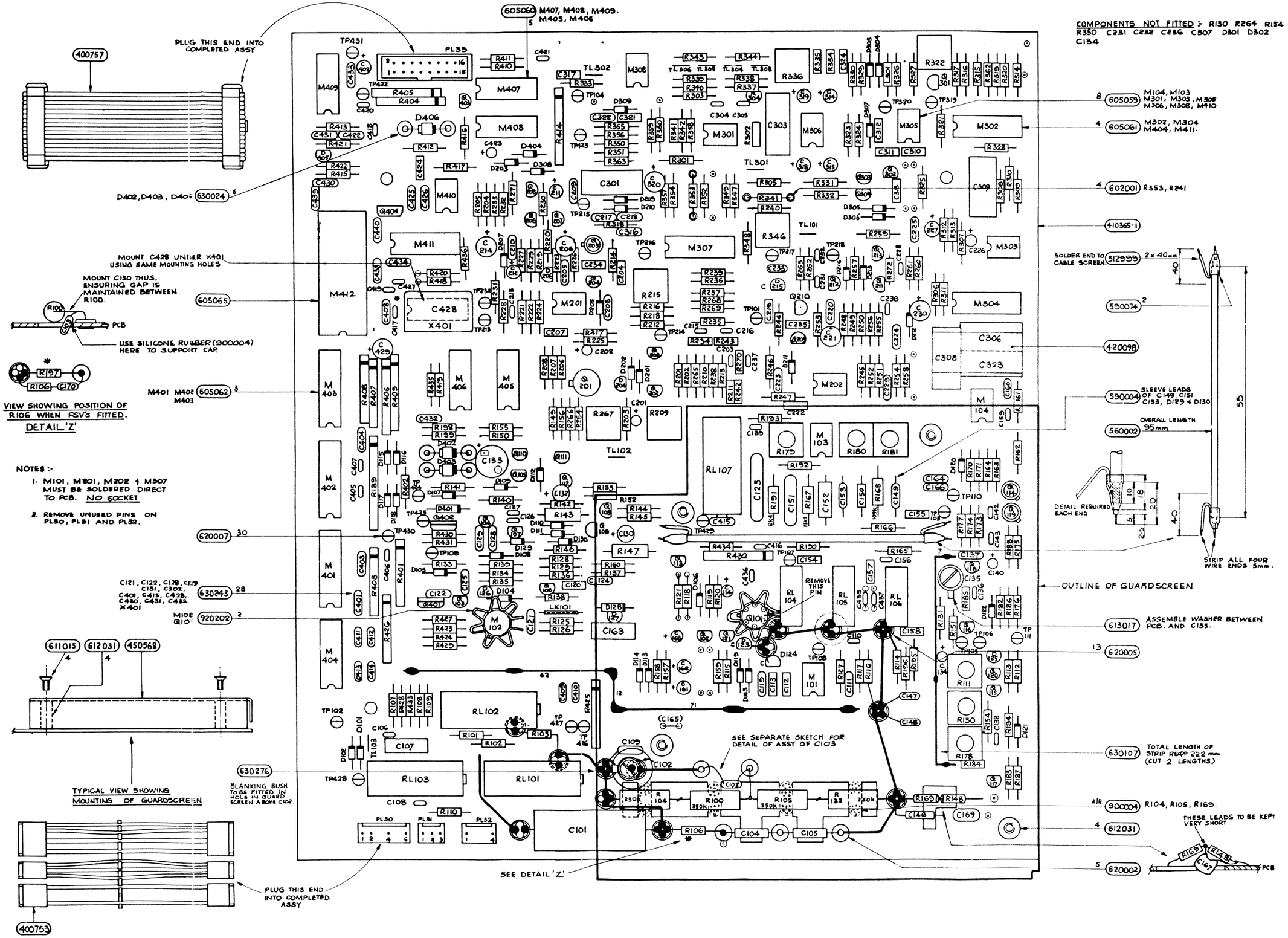

1281

datron WAVETEK

© Datron Instruments 1989

A.C. ASSEMBLY

Drawing No. 480741 Sheet 1

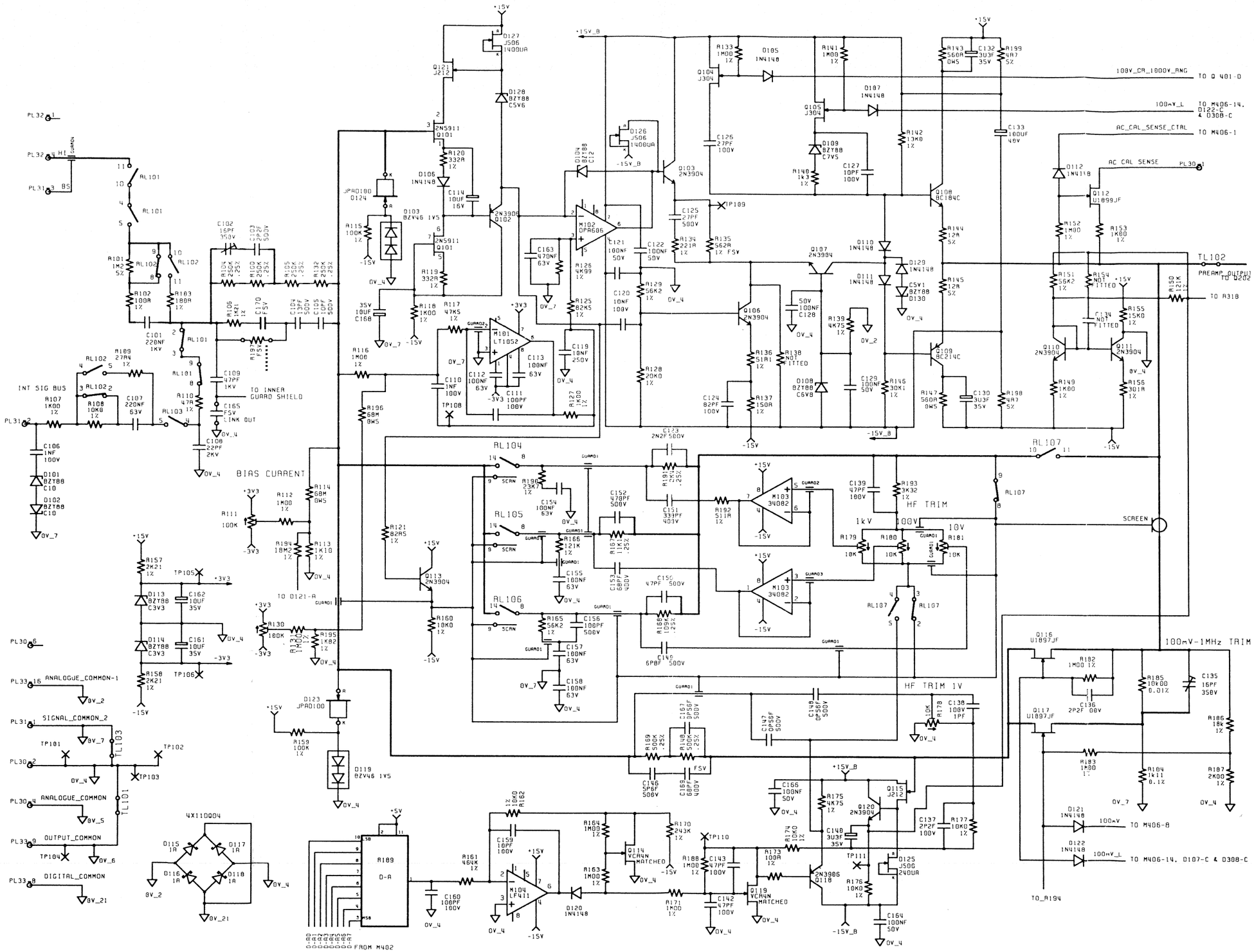

A.C. ASSEMBLY

Preamplifier

Drawing No. 430741 **Sheet 1 of 4**

1281

datron WAVETEK

© Datron Instruments 1989

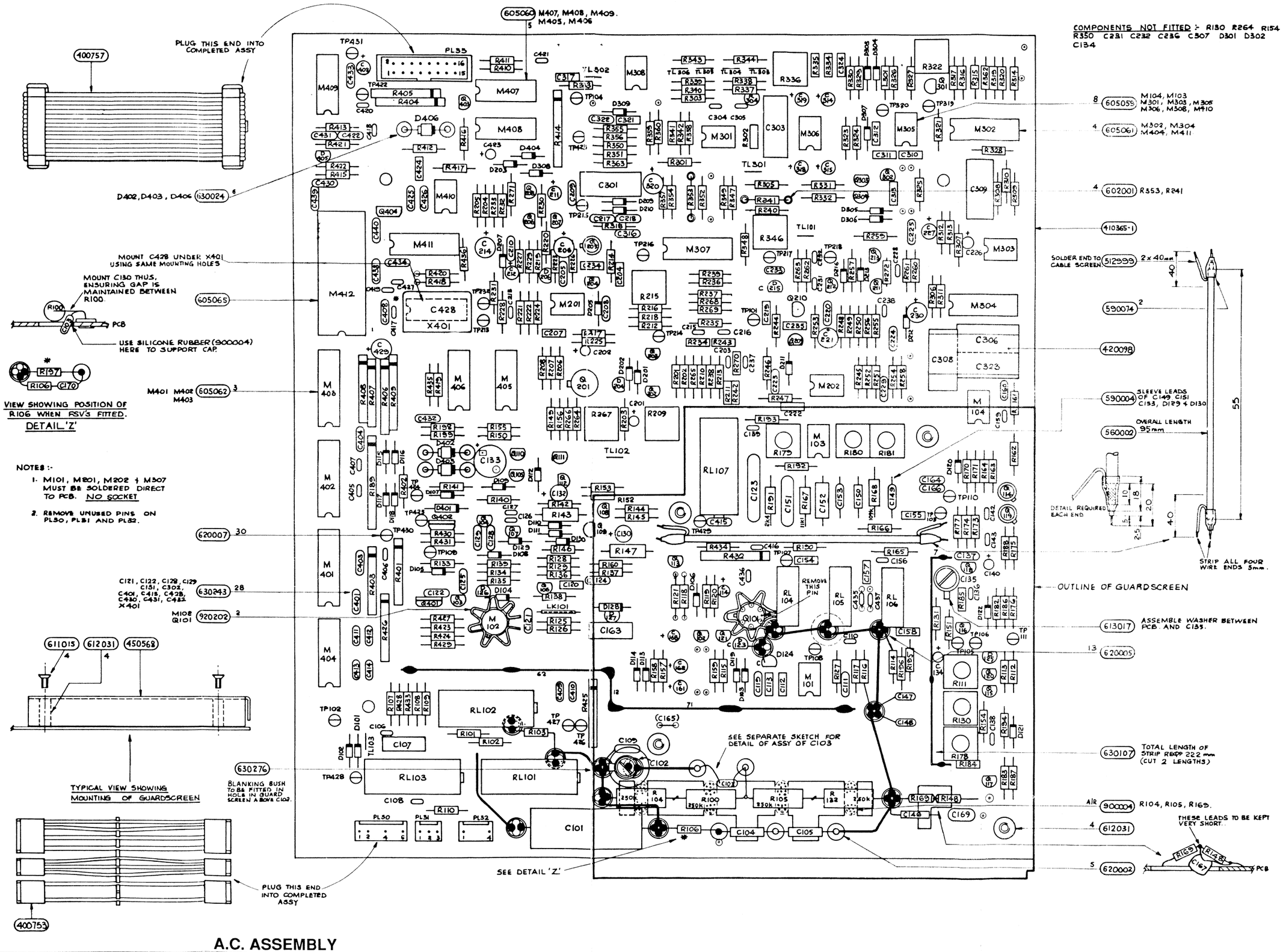

1281

datron WAVETEK

© Datron Instruments 1989

A.C. ASSEMBLY

Drawing No. 480741 Sheet 1

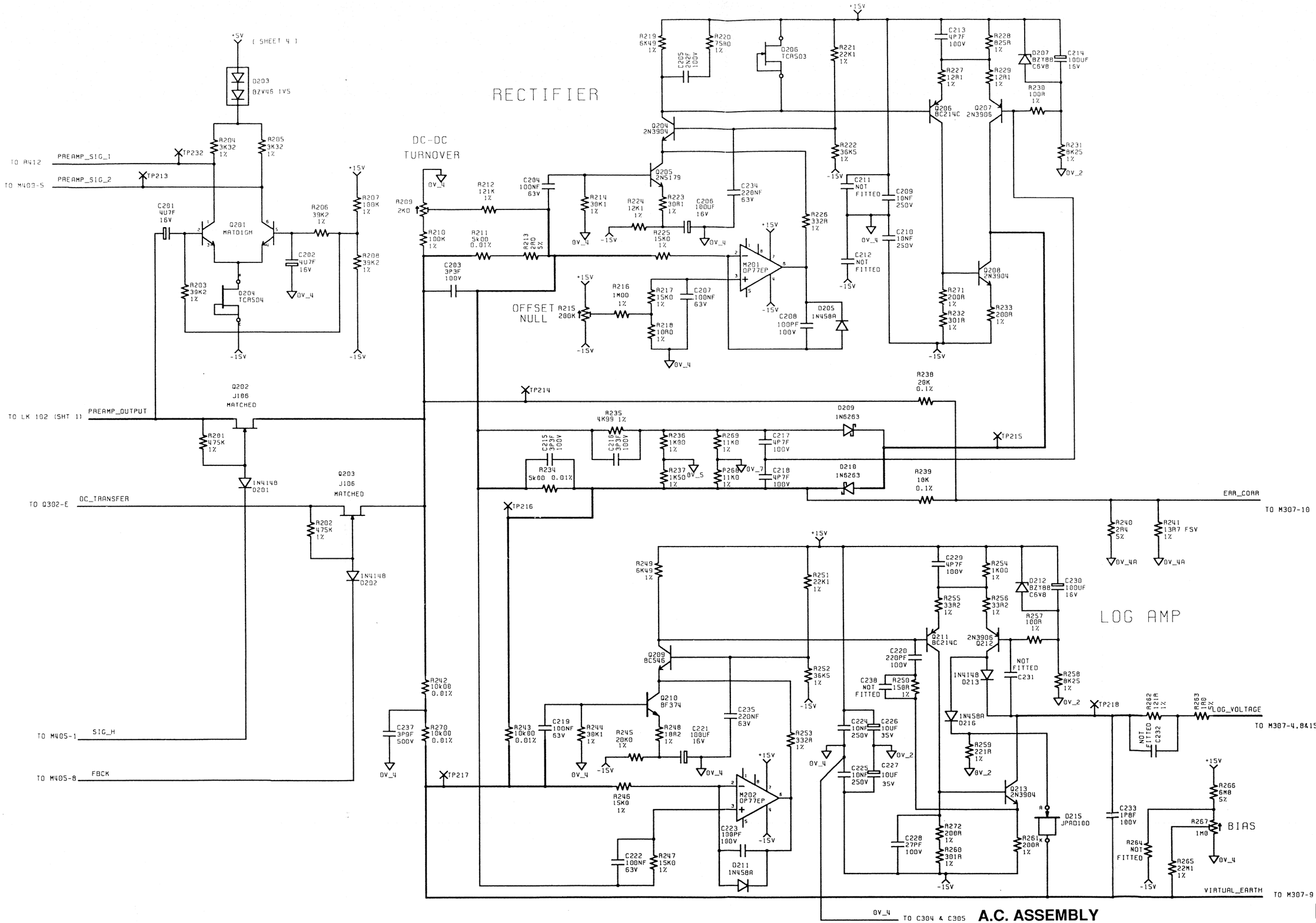

A.C. ASSEMBLY

Precision Rectifier and Logarithmic Amplifier

Drawing No. 430741 **Sheet 2 of 4**

1281

datron WAVETEK

© Datron Instruments 1989

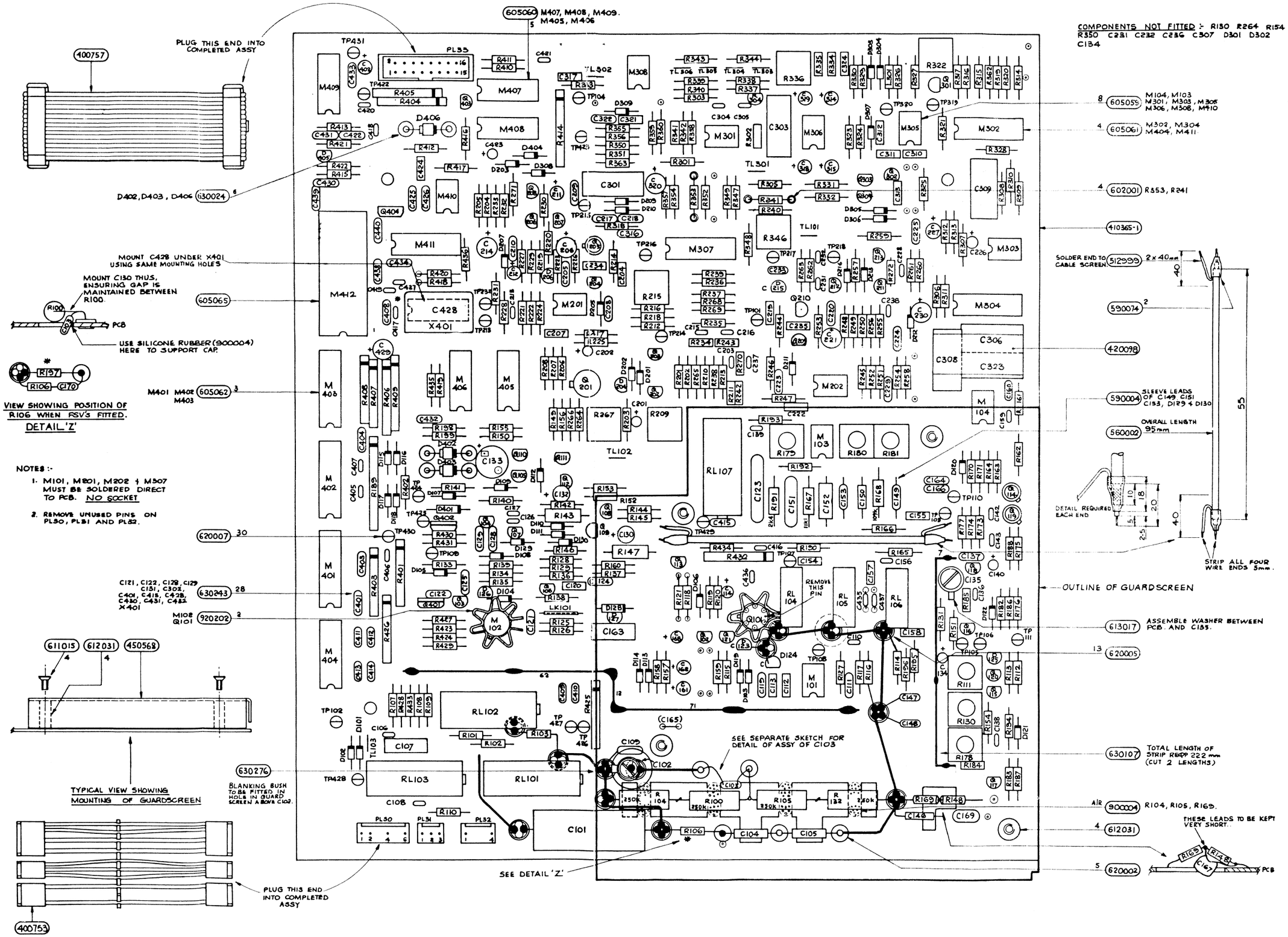

1281

datron WAVETEK

© Datron Instruments 1989

A.C. ASSEMBLY

Drawing No. 480741 Sheet 1

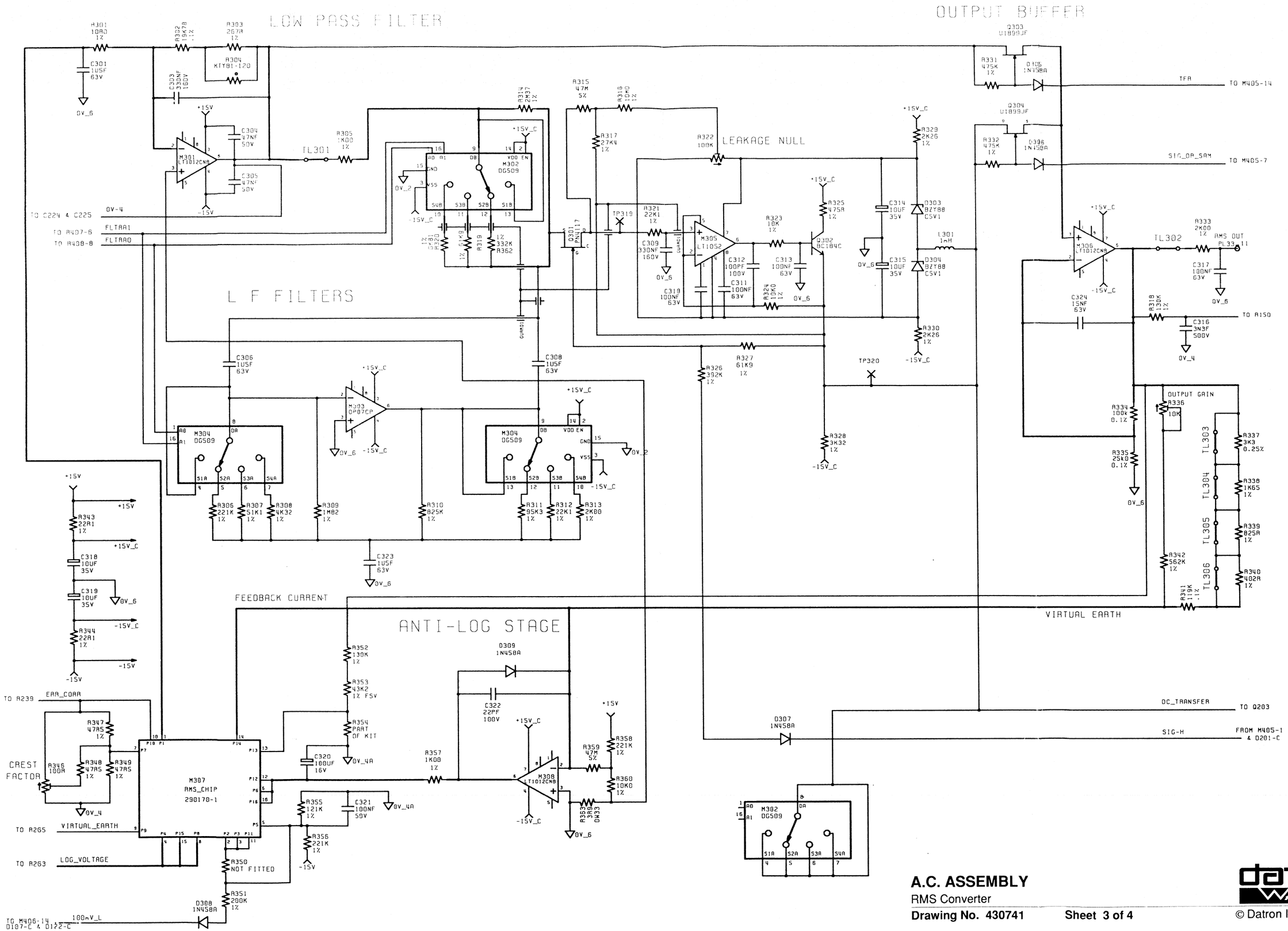

A.C. ASSEMBLY

RMS Converter

Drawing No. 430741 **Sheet 3 of 4**

1281

datron WAVETEK

© Datron Instruments 1989

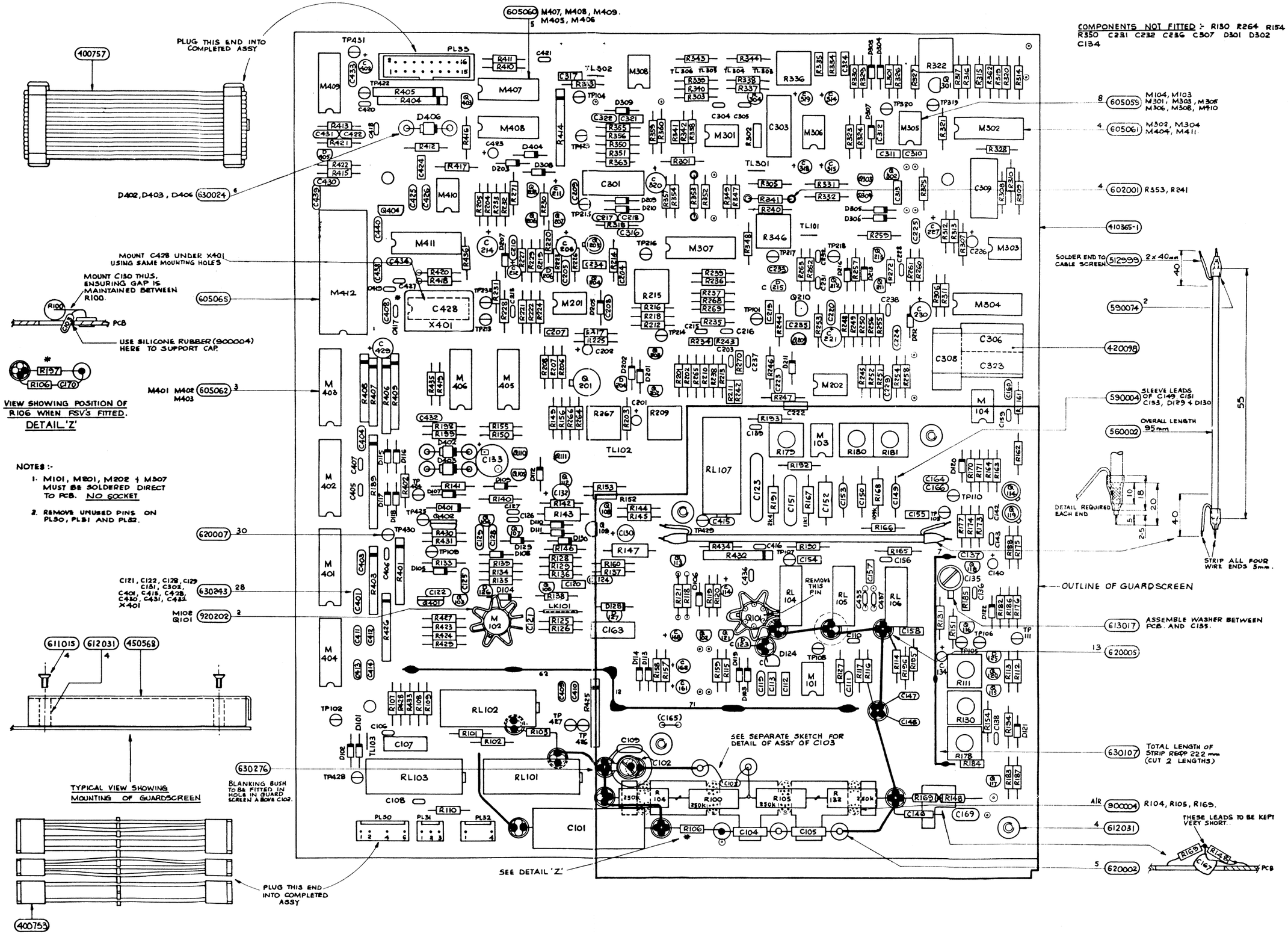

1281

datron WAVETEK

© Datron Instruments 1989

A.C. ASSEMBLY

Drawing No. 480741 Sheet 1

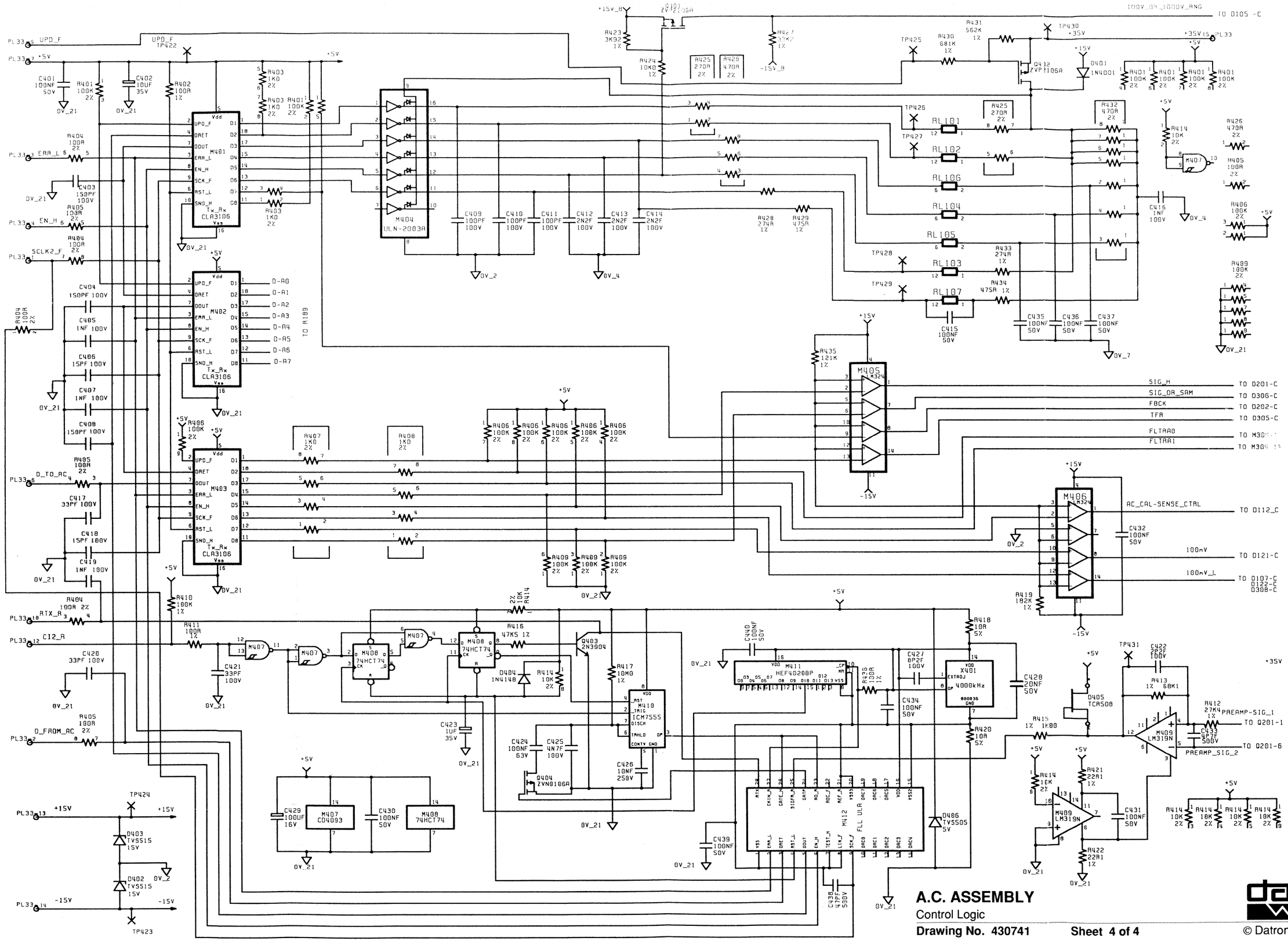

A.C. ASSEMBLY

Control Logic

Drawing No. 430741 **Sheet 4 of 4**

1281

datron WAVETEK

© Datron Instruments 1989

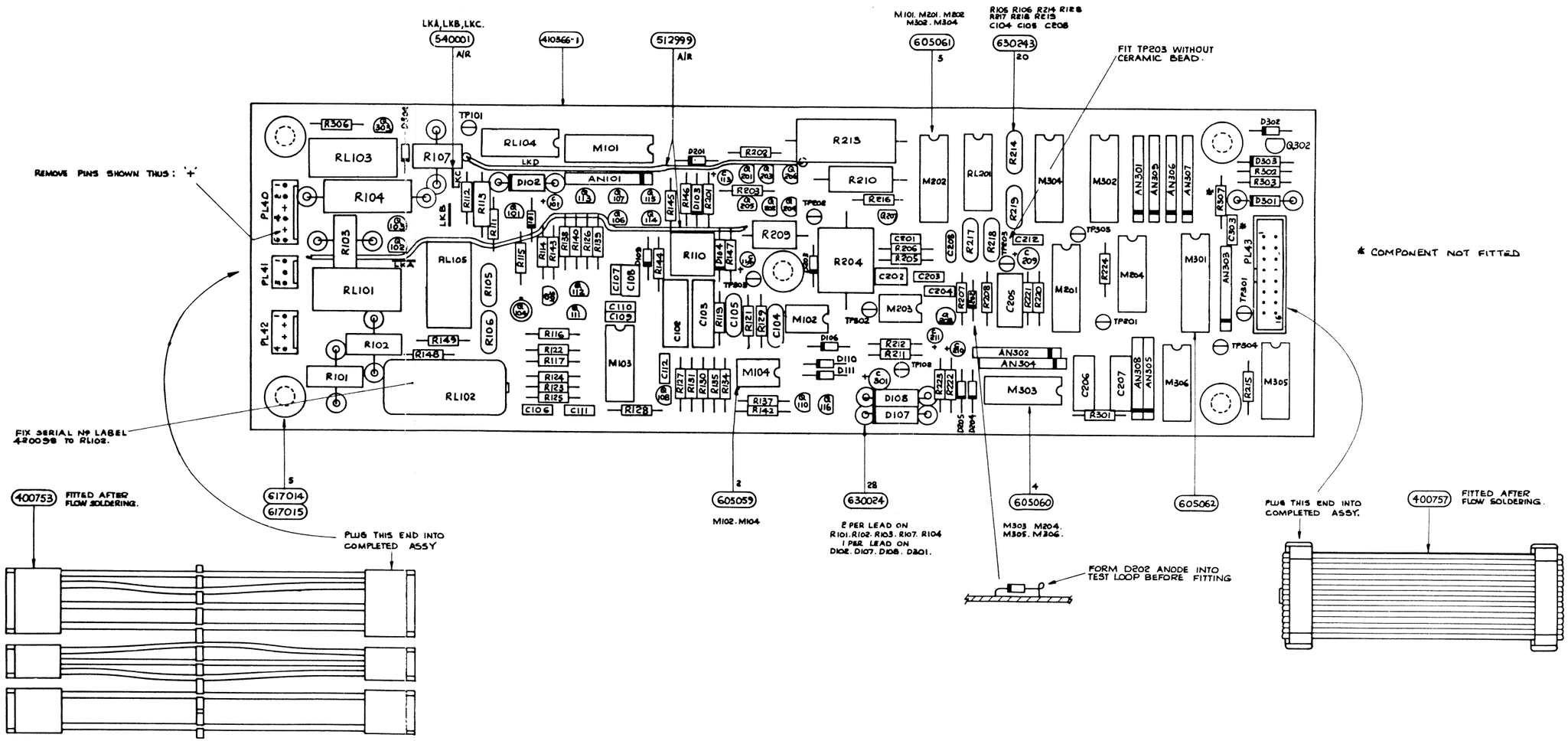

1281

datron WAVETEK

© Datron Instruments 1989

OHMS ASSEMBLY

Drawing No. 480742 **Sheet 1**

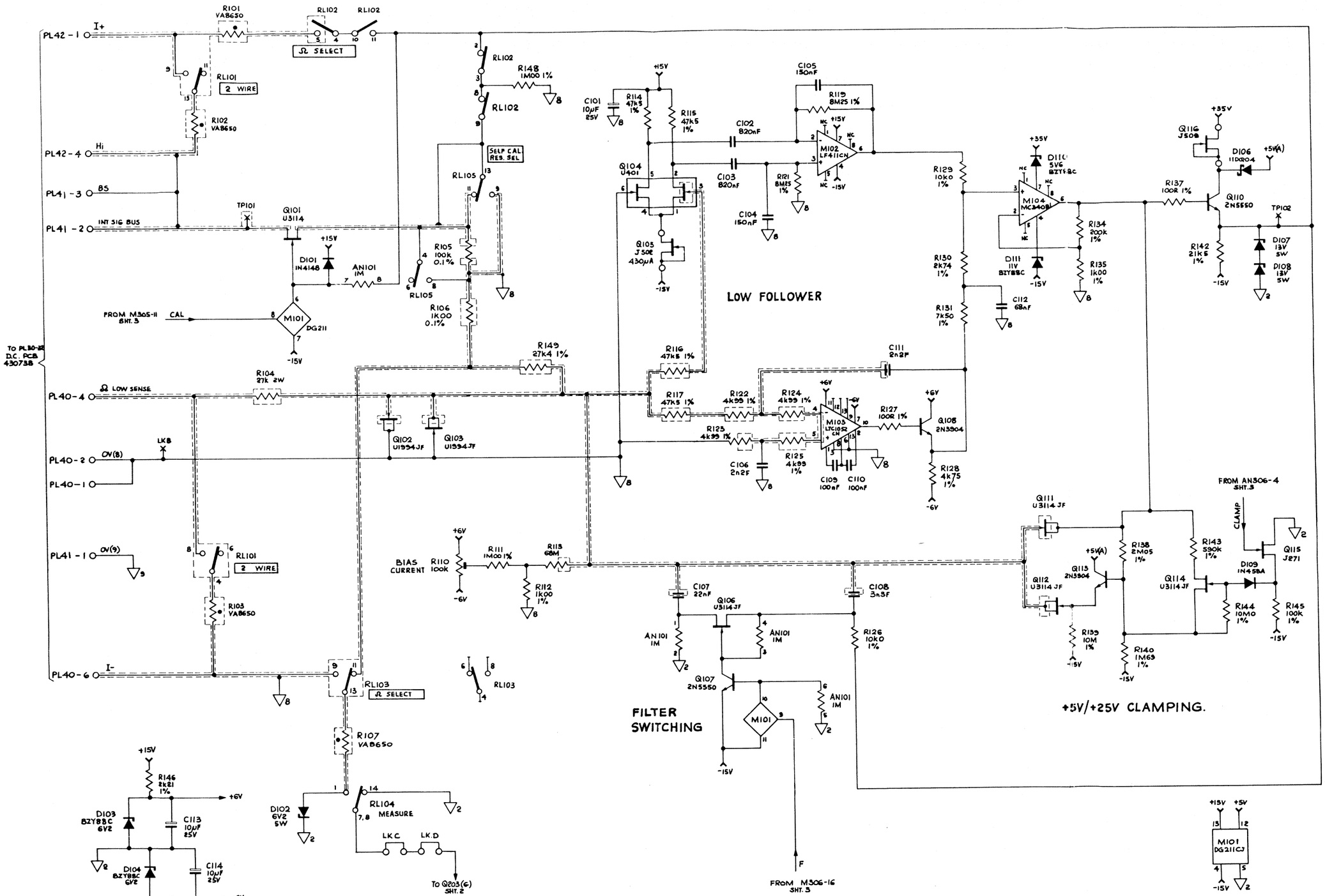

OHMS ASSEMBLY

Low Follower

Drawing No. 430742 **Sheet 1 of 3**

1281

datron WAVETEK

© Datron Instruments 1989

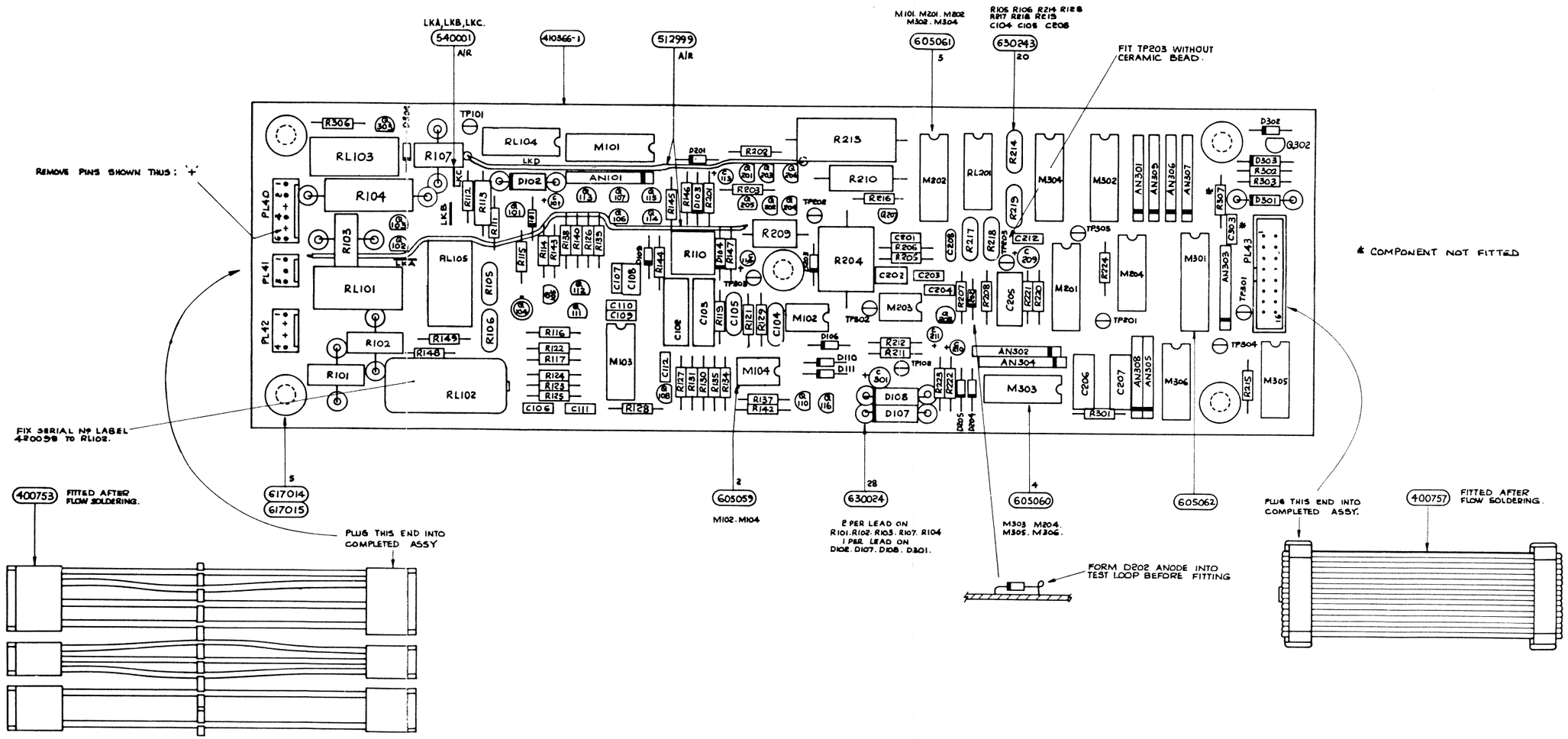

1281

datron WAVETEK

© Datron Instruments 1989

OHMS ASSEMBLY

Drawing No. 480742 **Sheet** 1

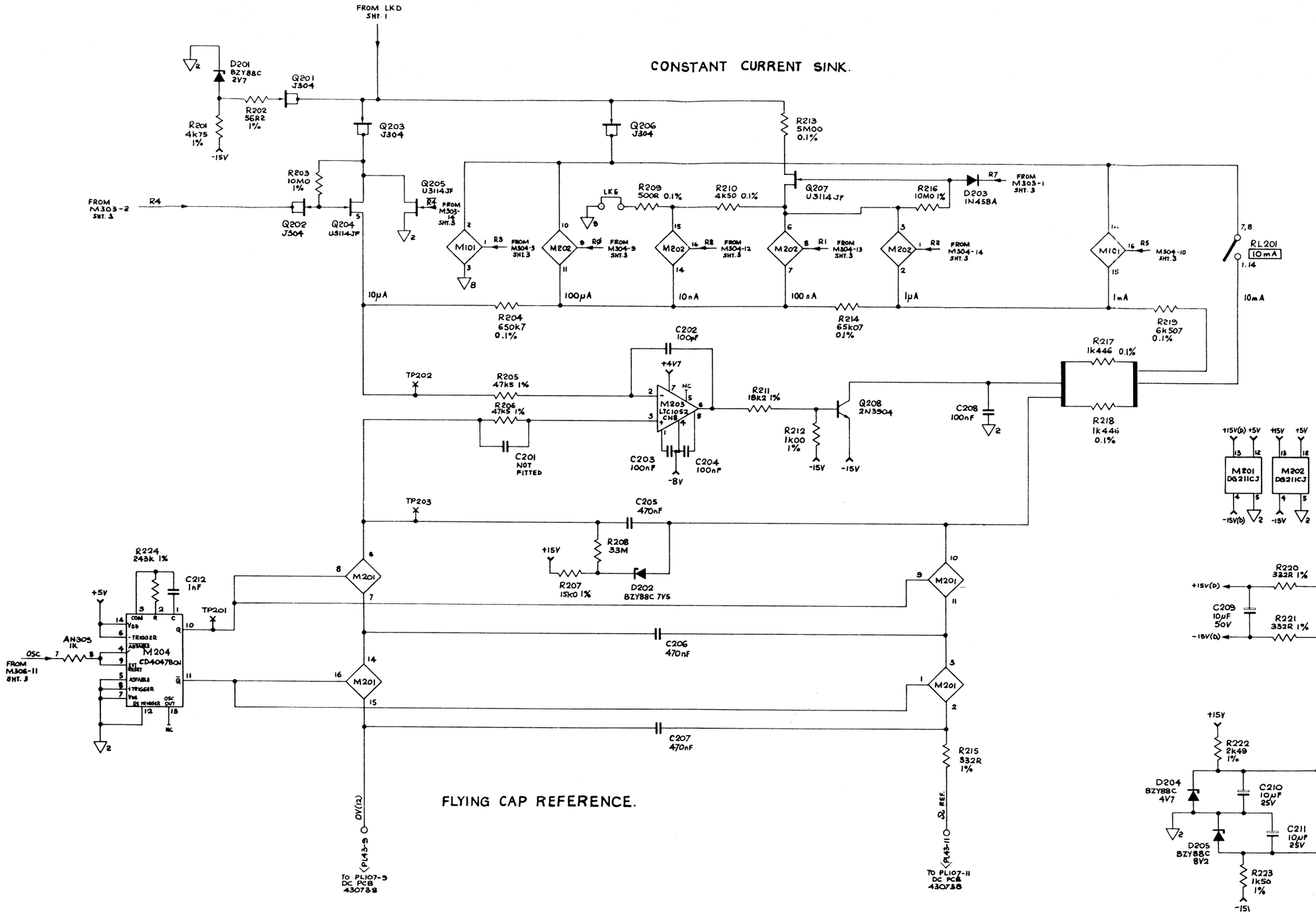

OHMS ASSEMBLY

Constant Current Sink

Drawing No. 430742 **Sheet 2 of 3**

1281

datron WAVETEK

© Datron Instruments 1989

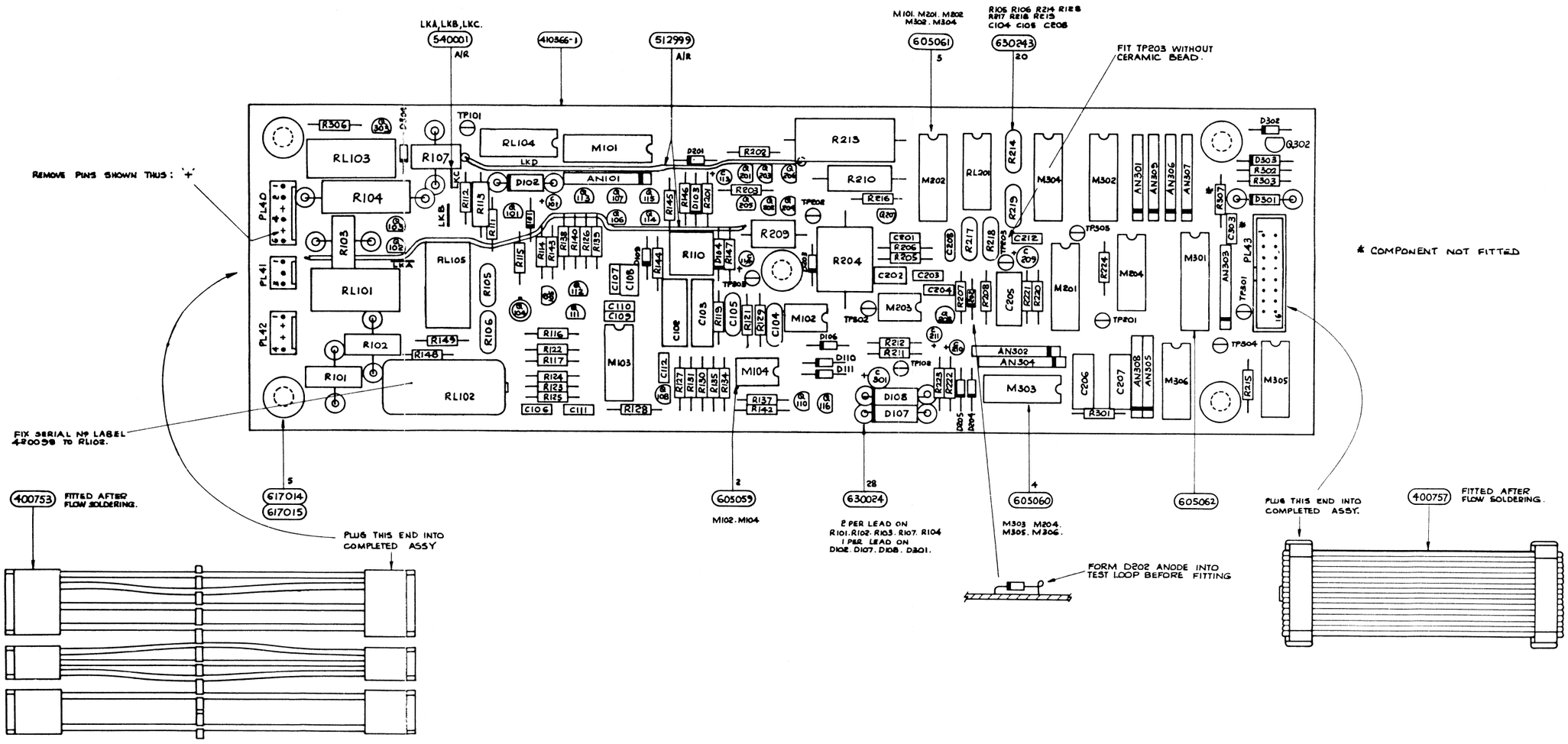

1281

datron WAVETEK

© Datron Instruments 1989

OHMS ASSEMBLY

Drawing No. 480742 **Sheet** 1

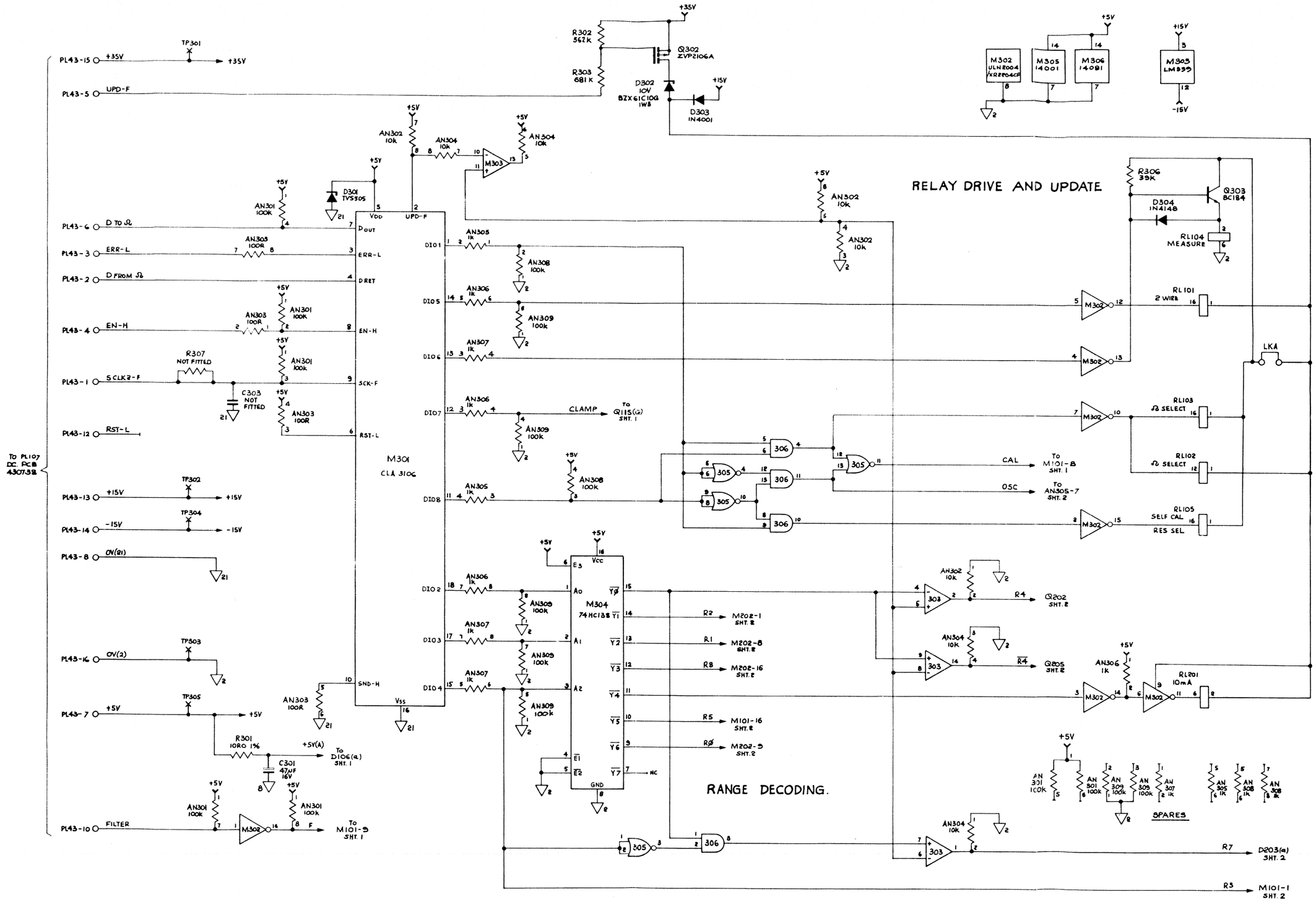

1281

OHMS ASSEMBLY

Control Logic

Drawing No. 430742 **Sheet 3 of 3**

datron WAVETEK

© Datron Instruments 1989

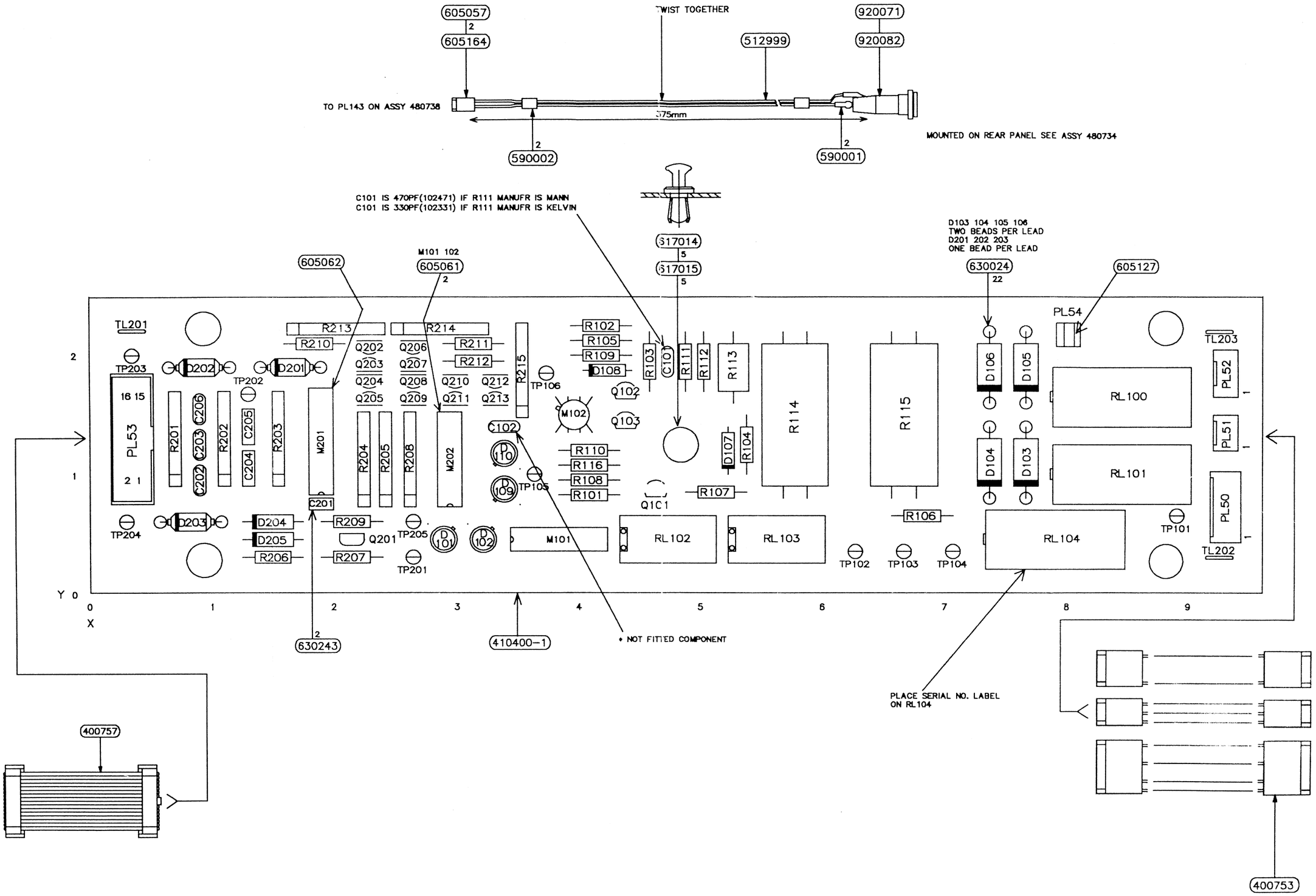

1281

datron WAVETEK

© Datron Instruments 1989

CURRENT ASSEMBLY

Drawing No. 480743 **Sheet** 1

NOTES

1 470pF IF A111 MANUFACTURED BY MANN
330PF IF A111 MANUFACTURED BY KELVIN

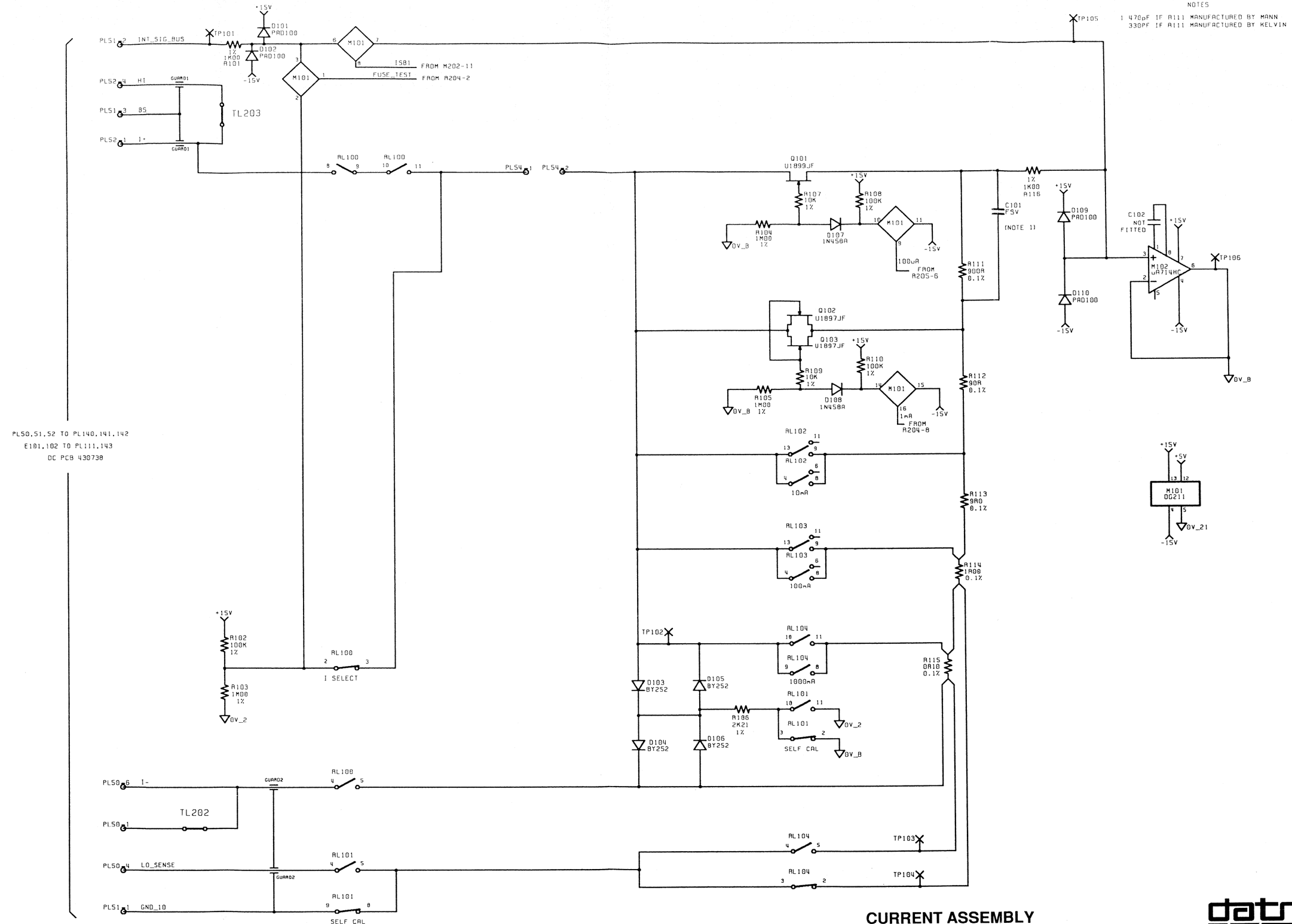

CURRENT ASSEMBLY

Current to Voltage Converter

Drawing No. 430743 **Sheet 1 of 2**

1281

datron WAVETEK

© Datron Instruments 1989

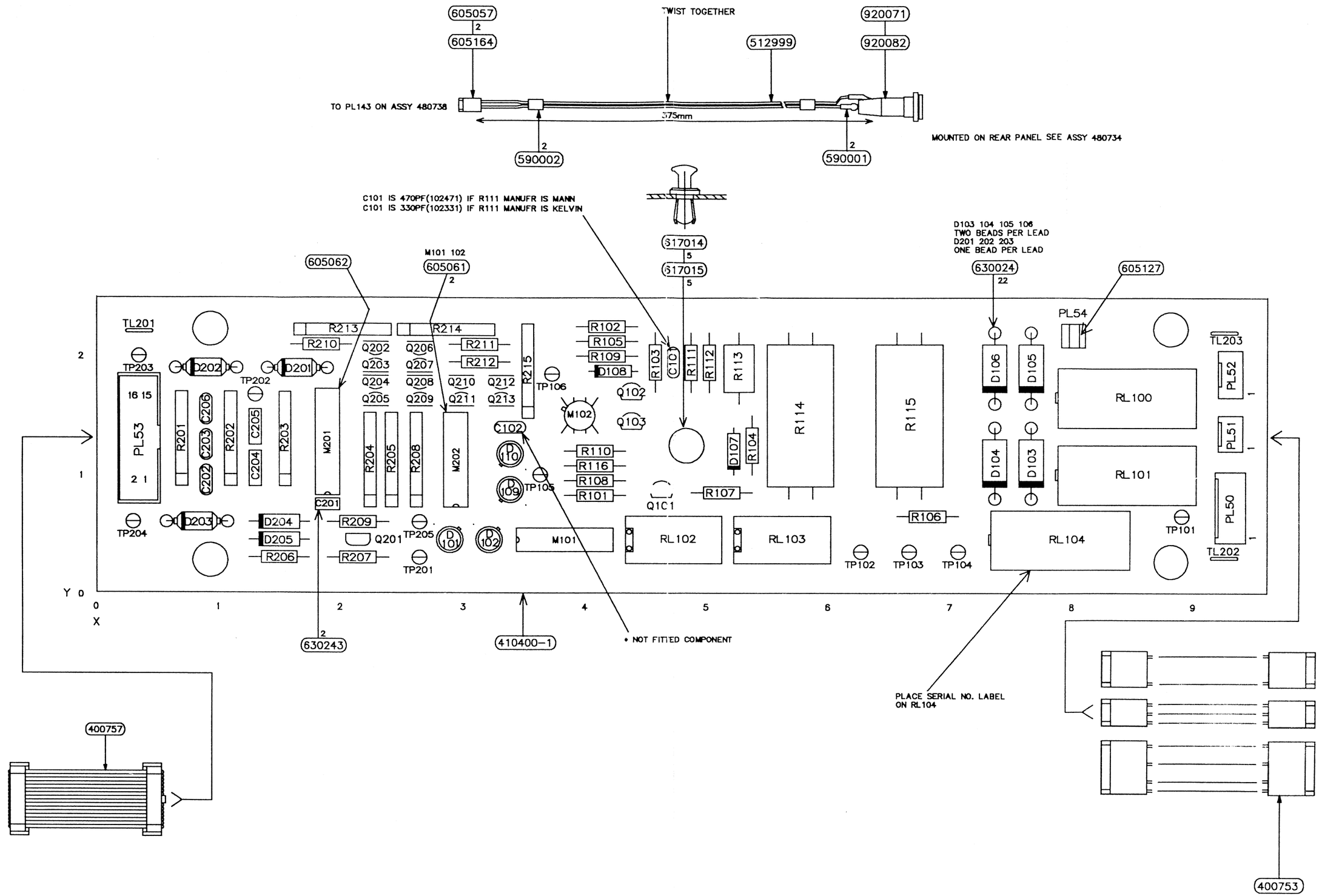

1281

datron WAVETEK

© Datron Instruments 1989

CURRENT ASSEMBLY

Drawing No. 480743 **Sheet** 1

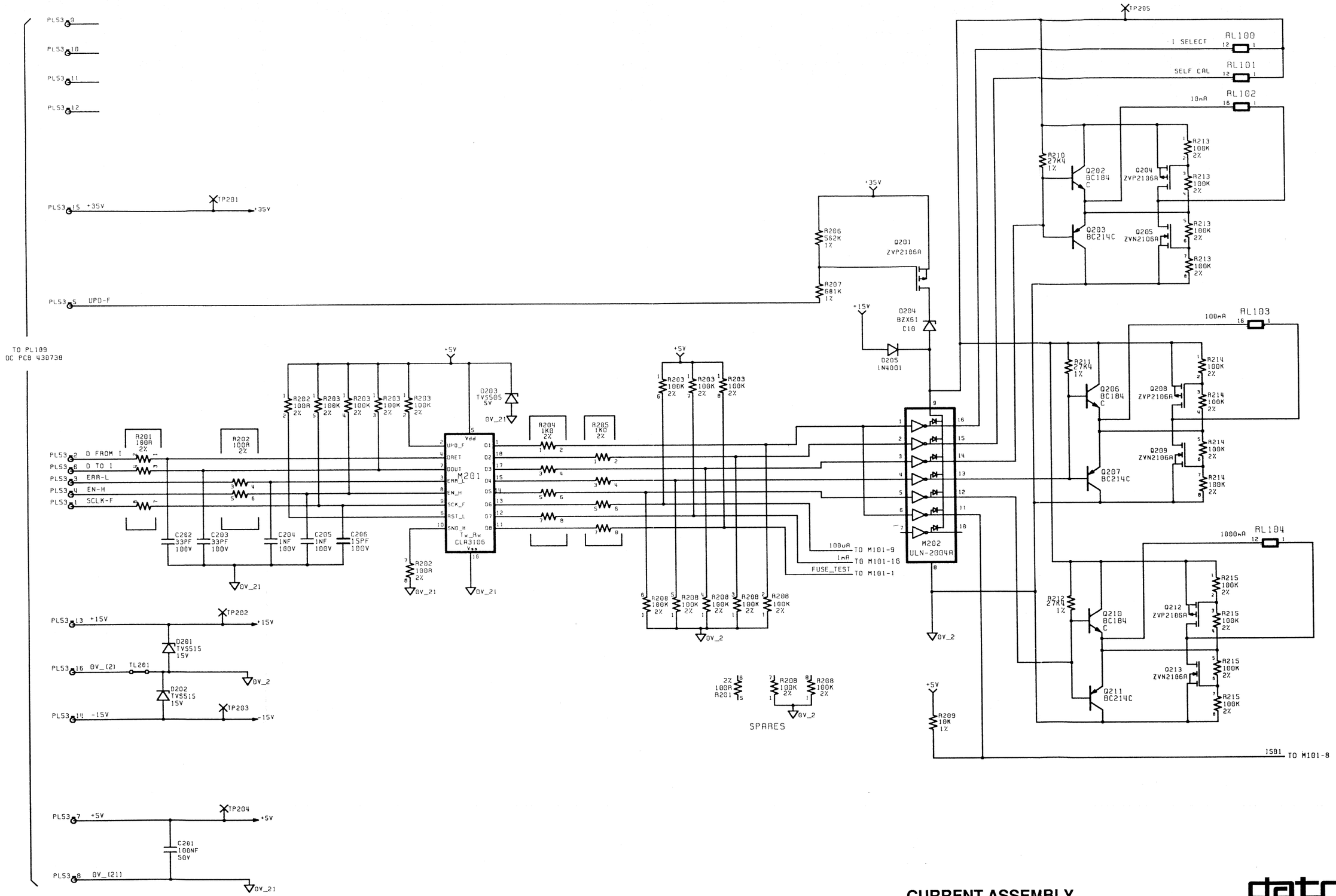

CURRENT ASSEMBLY

Control Logic

Drawing No. 430743 **Sheet 2 of 2**

1281

datron WAVETEK

© Datron Instruments 1989

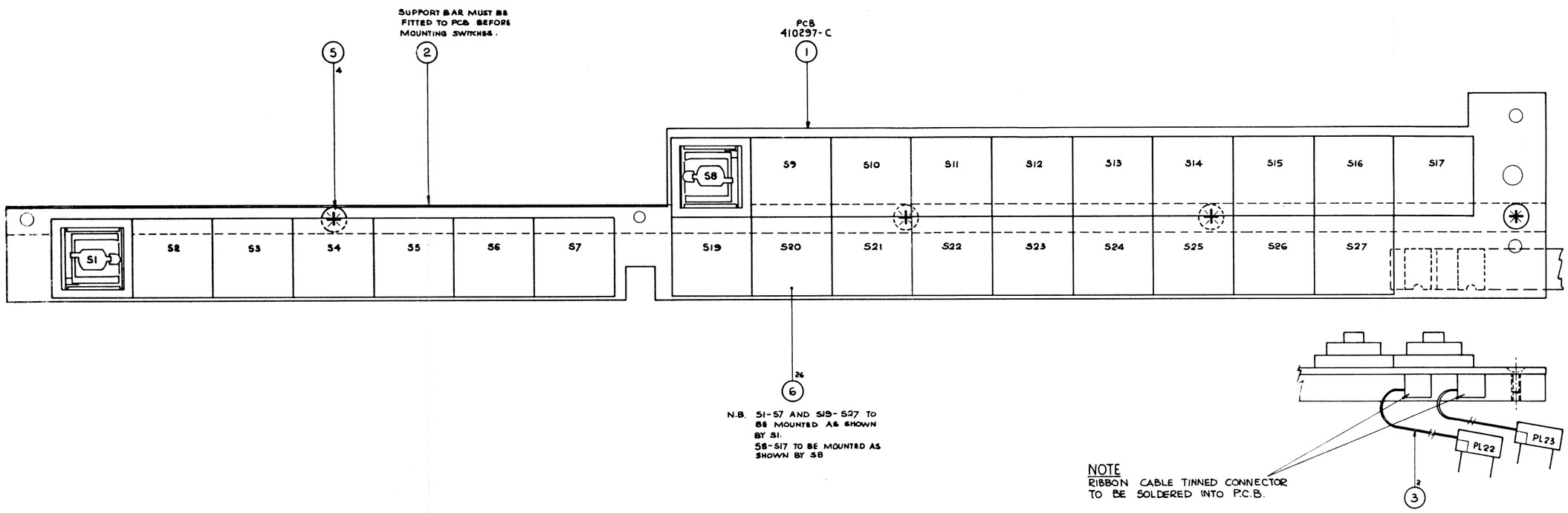

1281

datron WAVETEK

© Datron Instruments 1989

SWITCH ASSEMBLY

Drawing No. 480744 **Sheet 1**

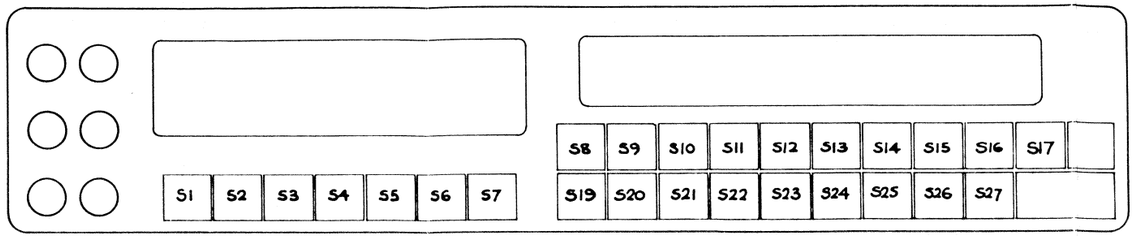

FRONT PANEL SWITCH LAYOUT.

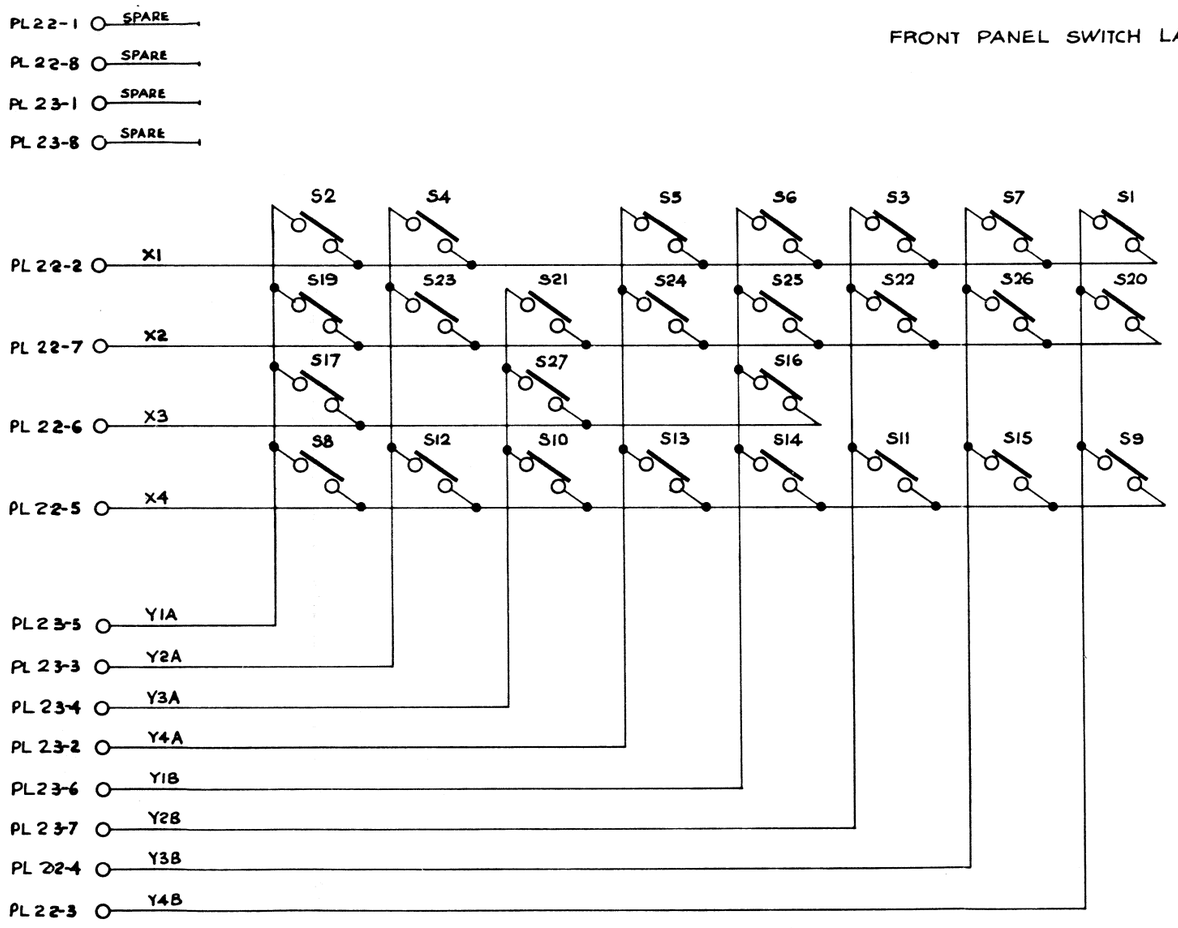

KEY Nº	*KB4-KBØ	KEY Nº	*KB4-KBØ
1	1C	17	Ø2
2	ØØ		
3	14	19	Ø1
4	Ø4	20	1D
5	ØC	21	Ø9
6	1Ø	22	15
7	18	23	Ø5
8	Ø3	24	ØD
9	1F	25	11
10	ØB	26	19
11	17	27	ØA
12	Ø7		
13	ØF		
14	13		
15	1B		
16	12		

* FOR KBØ-KB5 REFER TO 400739

KB5 IS A LOGIC '1' WHILE A VALID KEY IS HELD. THE KEY ENCODER OUTPUT ALWAYS INDICATES THE LAST VALID KEY ON KB4-KBØ.

1281

datron WAVETEK

SWITCH ASSEMBLY

Front Panel Switch Matrix

Drawing No. 430744 **Sheet 1 of 1**

© Datron Instruments 1989